synthra

PET-Tracer Synthesis Modules and Quality Control Equipment

synthra

Specialists in:

[^{11}C] Chemistry

[^{18}F] Chemistry

Radiometal Chelation · Ammonia

Quality Control Equipment

Experts in Radiosynthesizers & QC-Equipment

Synthra – Desire and Passion for Radiosynthesizers

Synthra is a worldwide leading and specialized manufacturer of branded radiosynthesizers and concentrates over 40 years of experiences in the field of radiopharmaceutical production, quality control and lab automation. We undertake automated production of molecular imaging tracers and continuously provide innovative solutions to facilitate and improve the production of tracers for Positron Emission Tomography (PET). Our portfolio comprises modules for the production of [^{11}C]- and [^{18}F]-radiotracers as well as other radioisotopes. It includes radiosynthesizers (incl. customized modules), HPLC equipment for purification and quality control, spare parts and service.

Our radiosynthesizers combine high performance and efficiency with high flexibility. Besides the attractive design, our software and synthesizer are highly user-friendly and meet the latest GMP regulations. They barely require maintenance. Commonly our modules offer an easy possibility to create own sequences for the synthesis of new radiopharmaceuticals. It also offers an automated self-cleaning system which is a unique, eco-friendly and time-efficient feature. Furthermore, we offer preventive maintenance contracts as well as full service contracts for each module on demand.

Table of Contents

1 The Synthra Concept 2
1.1 Custom-based Solutions 2
1.2 Low Prices & Low Waste 3
1.3 Quality & Innovation 3
1.4 Flexibility & Free Software 3
2 Design & Material 4
3 Software 5
4 Working with Synthra Modules 7
4.1 Cartridges 7
4.2 Chemicals 7
4.3 Synthesis 8
4.4 Self-Cleaning System 9
5 Radiosynthesizers 10
6 [^{11}C] Chemistry 12
6.1 Labeling Step and Reaction Options 14
6.2 [^{11}C] Radiosynthesizers - Overview 16
6.3 [^{11}C] Radiosynthesizers 18
6.4 Additional [^{11}C] options 32
7 [^{18}F] Chemistry 35
7.1 [^{18}F] Radiosynthesizers - Overview 37
7.2 [^{18}F] Radiosynthesizers 38
7.3 Additional [^{18}F] options 46
8 Other Synthezisers 48
8.1 Radiometal Chemistry 48
8.2 Synthra Radiometal Synthesizer 50
8.3 Ammonia Chemistry 54
8.4 Ammonia Synthesizer 54
9 Customized Solutions 56
10 HPLC Equipment 58
10.1 Synthra HPLC Units 58

1 The Synthra Concept

Due to the Synthra concept, we are able to offer an outstanding comprehensive package, based on four key points.

1.1 Custom-based Solutions

We are specialists in customized modules. They comprise from catalogued upgrades (or downgrades) to fully tailor-made machines. Customizations are available for all modules. User needs are priority, not only for modules, but also in service and support. We assist our customers on the creation of new synthesis files based on published and own developed syntheses.

Synthra offers a dedicated product line of purification cartridges for the use in combination with Synthra modules as well as for various other radiosynthesizers.

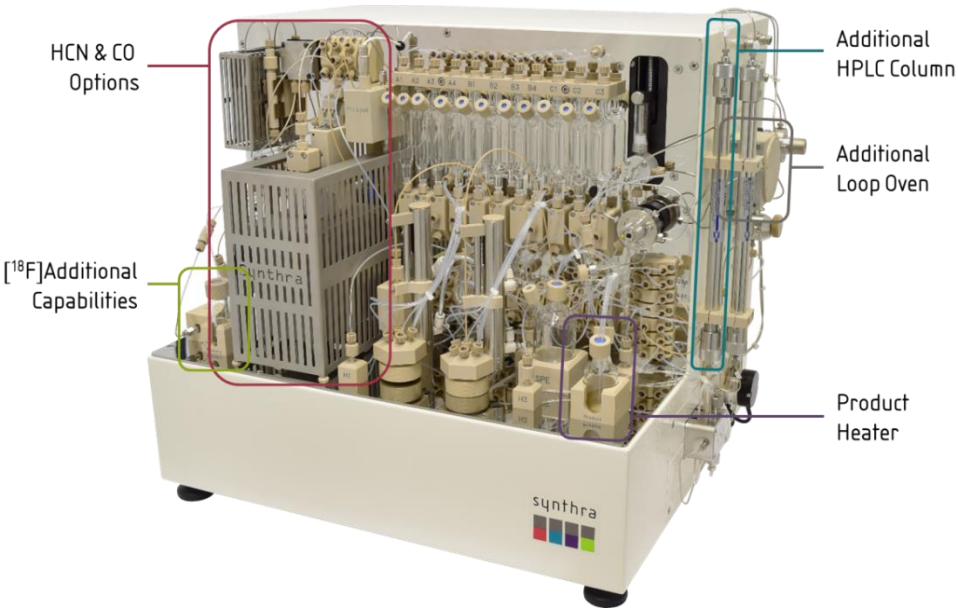

1.2 Low Prices & Low Waste

Our fixed tubing radiosynthesizers are flexible flow-path-based modules and do not support the use of cassettes. Instead of expensive disposable reagent kits, the user can purchase the reagents and cartridges from their supplier of choice. This concept reduces the price per production and eliminates the production of solid radioactive waste.

Additionally, our spare parts and maintenance contracts warrant low life-long costs which contributes to overall low long-term prices.

Finally, our exclusive automated self-cleaning system allows our customers to double the number of achievable runs, up to two [^{18}F] and four [^{11}C] productions per day and thereby reduces the long-term production costs.

1.3 Quality & Innovation

Our goal is to offer high-quality, cutting-edge products. To achieve this, we innovate and improve our modules continuously, equipping them with state-of-the-art technology.

Innovation is our absolute term and drive from the very beginning. The Synthra GmbH was established in 2008, motivated by the need of leading-edge solutions in the radiochemistry world. Our modules are manufactured with high-quality materials and are "made in Germany".

One of our unique features is the Self-Cleaning System: A built-in, fully automated filling and cleaning system that is comprised by a full set of additional valves, manifolds and solvent supply bottles. This allows the system to be rinsed automatically after each run– without opening the hot cell. The downtime between syntheses is reduced and allows the user to speed up their productions up to two [^{18}F] and four [^{11}C] runs per day.

Moreover, we recently designed two new features for the synthesis reactors. Certain labeling reactions show a color change that indicates the presence of a highly reactive intermediate. For that reason, we keep the content of the reaction vessel visible during synthesis by the use of a special insert. Something else that is becoming interesting is the treatment of the reaction mixture with light of a specific wavelength which is of great importance for some novel photocatalytic syntheses. Therefore, Synthra has developed a special photoreactor for this purpose.

Our strengths are not only based on radiosynthesizers, but also on the quality of our service. We offer very competitive service contracts and preventive maintenance visits as well as continuous support by our qualified technical staff.

1.4 Flexibility & Free Software

All of our modules are conceived as 100 % flexible systems with semi-fixed set-ups. The flexible flow-path can be changed for every single reaction. Due to the PEEK fittings, all valves, reactors, syringes and cartridges are easily reconnected. The graphical user interface (GUI) can be modified to adapt to each synthesis.

The GMP-compliant SynthraView Software is free of charge for our customers and does not require license purchase. An unlimited number of computers have access to the software. New sequences can be created, tested and evaluated with our demo version.

The development of user-defined syntheses can be done from scratch or by modifying one of the existing pre-defined synthesis files that are already included in the software. The user has full control over creation and modification of sequences. Synthra offers continuous support and upgrades for all Synthra modules.

2 Design & Material

Synthra radiosynthesizers are designed as closed systems for GMP and GLP conform production of radiotracers. All wetted components are chemically inert to simplify maintenance and protect the final product. Our modules are equipped with a chemical inert vacuum pump (end vacuum up to 5 mbar) and a cooling trap for the collection of radioactive volatiles. Exhaust gas can be collected separately.

Synthra modules offer five different reactor types which allow both homogeneous and heterogeneous reactions. The current reactor options are:

- Closed reaction vessel (250 °C)
- Loop oven (220 °C)
- Cartridge oven (220 °C)
- Non-heatable reaction loop
- Photoreactor (450 nm, other wavelengths on request)

The main heaters are proportional–integral–derivative (PID) controlled and can be cooled down to -30 °C for [^{18}F] modules and down to -196 °C for [^{11}C] radiosynthesizers, reducing reaction time. The optimized heating/cooling from RT to 100 °C and vice versa takes about one minute. All reaction vessels and circulation systems are pressure monitored. Synthra radiosynthesizers are equipped with up to eight Geiger-Müller (GM) counters for radioactivity recording, synthesis progress monitoring and final yield calculation. Several Synthra synthesizers are equipped with a built-in Radio-UV-HPLC Unit. The standard HPLC system consists of an automatic pneumatic injection valve, an integrated isocratic HPLC pump, an UV-detector, a radiation detector, a semi-preparative HPLC column and a purge valve.

Some of our modules (for instance our RNplus Research) are equipped with a quaternary gradient pump, a second HPLC column and a switching valve for column selection. Quaternary-HPLC upgrade is available for all appropriate Synthra units.

3 Software

The synthesizers are computer controlled via the SynthraView software and can be operated either fully automatic, using pre-designed time lists, or by manual operation of the automated system. Both options are performed via graphical user interface.

As a preparative data and control system, SynthraView meets all the requirements of up-to-date software in radiochemical chromatography and synthesis control. Its flexibility and modular construction allow users to adapt the software to their requirements. SynthraView offers a user-friendly interface and method construction.

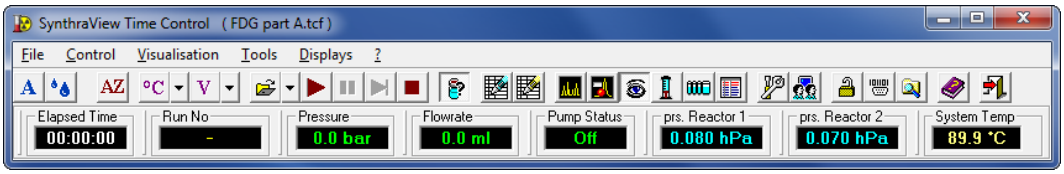

The GMP-compliant software is free of charge, no licenses are required. SynthraView allows access from unlimited external computers including a demo version. New sequences can be created, tested and evaluated by graphical simulation. Any new user-defined synthesis can be developed from scratch or modified from already existing synthesis files. The user has full control over creation and modification of sequences.

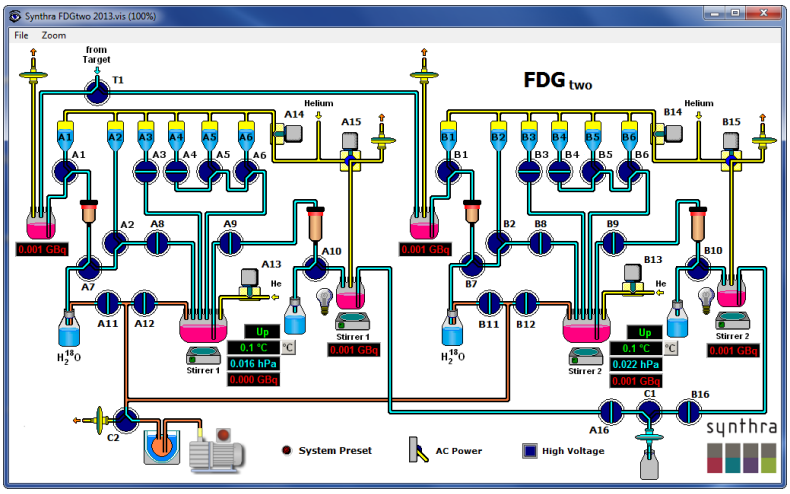

The software allows isocratic elution of up to four solvents and quaternary gradient programming. Switching valves, fraction collectors, heaters and syringe dosing pumps can be controlled by time, threshold values or automatic peak sampling.
Synthra radiosynthesizers run with a data logging procedure. All manual or automated operations are separately monitored and recorded. The graphical user interface allows monitoring and control of up to 27 channels. An entire synthesis run can be displayed in a visualization diagram that can be formatted individually.

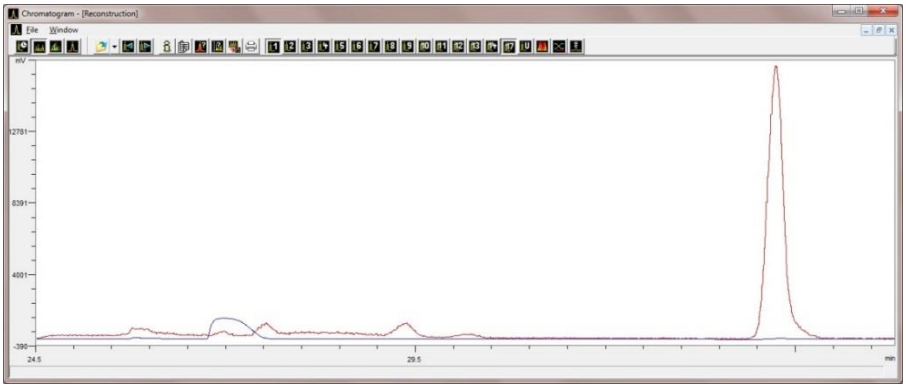

The icons and visualization diagram of the system allow manual control of the pumps and valves. The time control file indicates the current stage in progress at any time.

At the end of the synthesis a full GMP/GLP conform production documentation is generated including data logging capability (audit trail). This documentation records:

- Operator name, time and date
- Starting material, batch information
- Preparation steps
- Complete audit trail of sequence alteration:
    - All synthesis steps and modifications
    - Time control tables
    - Sequence tables
    - Protocol of the run
- The graphical trend of up to 18 channels:
    - Up to eight radioactivity channels
    - Temperature channels
    - Pressure channels
    - Radiochemical yield
    - Specific activity of the labeled radiopharmaceutical
    - Integration results
    - Fraction table and chromatograms

The generated cGMP & GLP compliant production report can be exported and printed. National and international regulations are fully supported. The software is 21CFRpart11 and LIMS compatible.

4 Working with Synthra Modules

4.1 Cartridges

Synthra radiosynthesizers are flexible flow-path-based modules. By conviction, Synthra modules do not support the use of cassettes, instead reagents are filled into vials manually. Cartridges are used for in-process purification. At the end of the synthesis, only the small purification cartridges need to be disposed, this nearly eliminates the production of solid radioactive waste.
The cartridges are easy to use and can be plugged and unplugged using standard LUER connections.

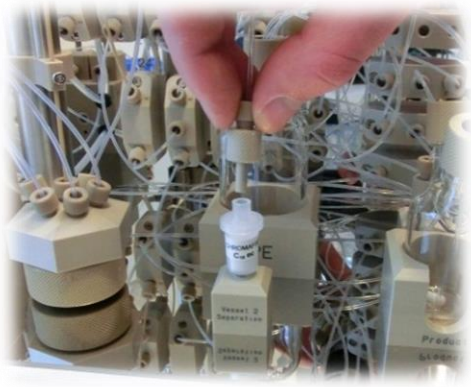

Synthra developed a dedicated line of purification cartridges, designed especially for the use in radiochemistry, either in Synthra modules as well as other branded radiosynthesizers. The dedicated cartridges are:

- ✓ FDG-Acid Hydr. Set IV
- ✓ FDG-Base Hydr. Set V
- ✓ [^{18}F] Separation Cartridge
- ✓ NaOH Iodine Trap Cartridge

Nevertheless, Synthra users are not bound to any supplier as our modules support cartridges from various manufacturers.

4.2 Chemicals

Synthra modules do not require the use of pre-filled cassettes. Instead, the customer can purchase the standard reagents directly from the supplier of choice which reduces the price, per production run, remarkably. Synthra supplies lists of recommended chemicals and cartridges for different syntheses. Before use, the closed synthesis system is flushed with an inert gas (He, N_2 or Ar). The reagent vials and reaction vessels are then filled up through the septa and the module is ready to use. Synthra synthesizers allow the use of sensitive reagents such as Grignard reagents, lithium aluminum hydride or dry solvents.

4.3 Synthesis

Before starting the synthesis, the software displays a checklist which contains all necessary steps for the synthesis to be started. For instance, the checklist shows which reagents need to be filled in and which cartridge should be placed where.

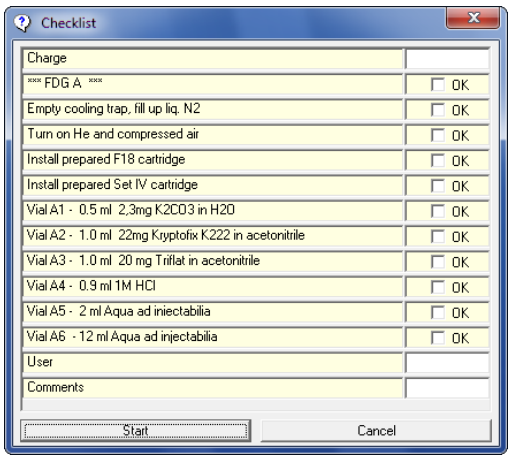

During the automatic operated synthesis, the Control File Visualization shows the complete synthesis program including all commands of the operating file. To follow the synthesis progress easily, the software shows the accomplished commands marked in red whereas the pending tasks are shown in blue. The "display information" function shows useful information in the visualization like the current step of the synthesis throughout the whole synthesis.

After the synthesis is completed, a full GMP/GLP conform report is generated. It contains all synthesis relevant data and results, as well as checklists, operations and the recording of up to 18 parameters including all chromatograms.

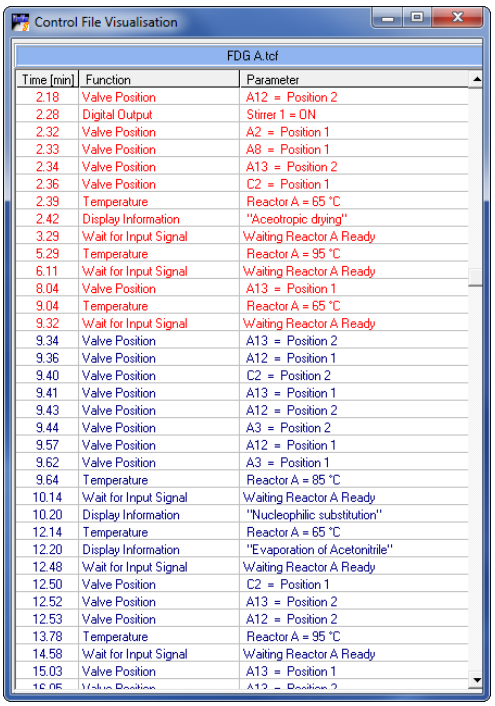

Time [min]	Function	Parameter
2.18	Valve Position	A12 = Position 2
2.28	Digital Output	Stirrer 1 = ON
2.32	Valve Position	A2 = Position 1
2.33	Valve Position	A8 = Position 1
2.34	Valve Position	A13 = Position 2
2.36	Valve Position	C2 = Position 1
2.39	Temperature	Reactor A = 65 °C
2.42	Display Information	"Aceotropic drying"
3.29	Wait for Input Signal	Waiting Reactor A Ready
5.29	Temperature	Reactor A = 95 °C
6.11	Wait for Input Signal	Waiting Reactor A Ready
8.04	Valve Position	A13 = Position 1
9.04	Temperature	Reactor A = 65 °C
9.32	Wait for Input Signal	Waiting Reactor A Ready
9.34	Valve Position	A13 = Position 2
9.36	Valve Position	A12 = Position 1
9.40	Valve Position	C2 = Position 2
9.41	Valve Position	A13 = Position 1
9.43	Valve Position	A12 = Position 2
9.44	Valve Position	A3 = Position 2
9.57	Valve Position	A12 = Position 1
9.62	Valve Position	A3 = Position 1
9.64	Temperature	Reactor A = 85 °C
10.14	Wait for Input Signal	Waiting Reactor A Ready
10.20	Display Information	"Nucleophilic substitution"
12.14	Temperature	Reactor A = 65 °C
12.20	Display Information	"Evaporation of Acetonitrile"
12.48	Wait for Input Signal	Waiting Reactor A Ready
12.50	Valve Position	C2 = Position 1
12.52	Valve Position	A13 = Position 2
12.53	Valve Position	A12 = Position 2
13.78	Temperature	Reactor A = 95 °C
14.58	Wait for Input Signal	Waiting Reactor A Ready
15.03	Valve Position	A13 = Position 1

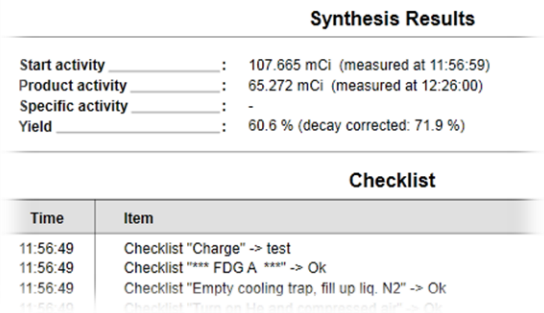

Synthesis Results

Start activity	:	107.665 mCi (measured at 11:56:59)
Product activity	:	65.272 mCi (measured at 12:26:00)
Specific activity	:	-
Yield	:	60.6 % (decay corrected: 71.9 %)

Checklist

Time	Item
11:56:49	Checklist "Charge" -> test
11:56:49	Checklist "*** FDG A ***" -> Ok
11:56:49	Checklist "Empty cooling trap, fill up liq. N2" -> Ok

4.4 Self-Cleaning System

The built-in, fully automatic Self-Cleaning system consists of three external cleaning solvent supply bottles, which are connected to the module through a PEEK manifold, and a set of additional valves (three cleaning solvent valves, two valves to flush the syringe pump and one additional valve per reagent vial).

Features and benefits:

- ✓ Automatic filling and cleaning program
- ✓ Multiple cleaning cycles
- ✓ Rinsing of the system after each run without opening the hot cell
- ✓ Reducing the downtime between two syntheses
- ✓ Allowing up to two [^{18}F] and four [^{11}C] productions per day

In all Synthra modules with a built-in syringe pump the Self-Cleaning system is included and is also available as an upgrade for older modules!

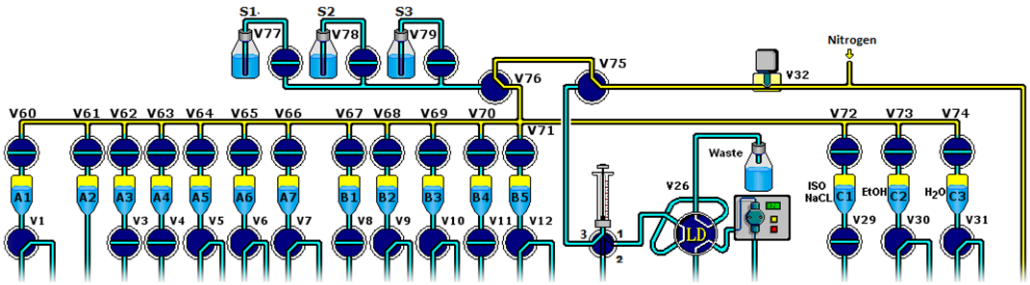

5 Radiosynthesizers

Synthra's synthesizer product line is divided into three groups. The main focus is set on the production of [^{11}C] and [^{18}F] tracers. Moreover, Synthra offers synthesizers for different radioactive metal tracers.

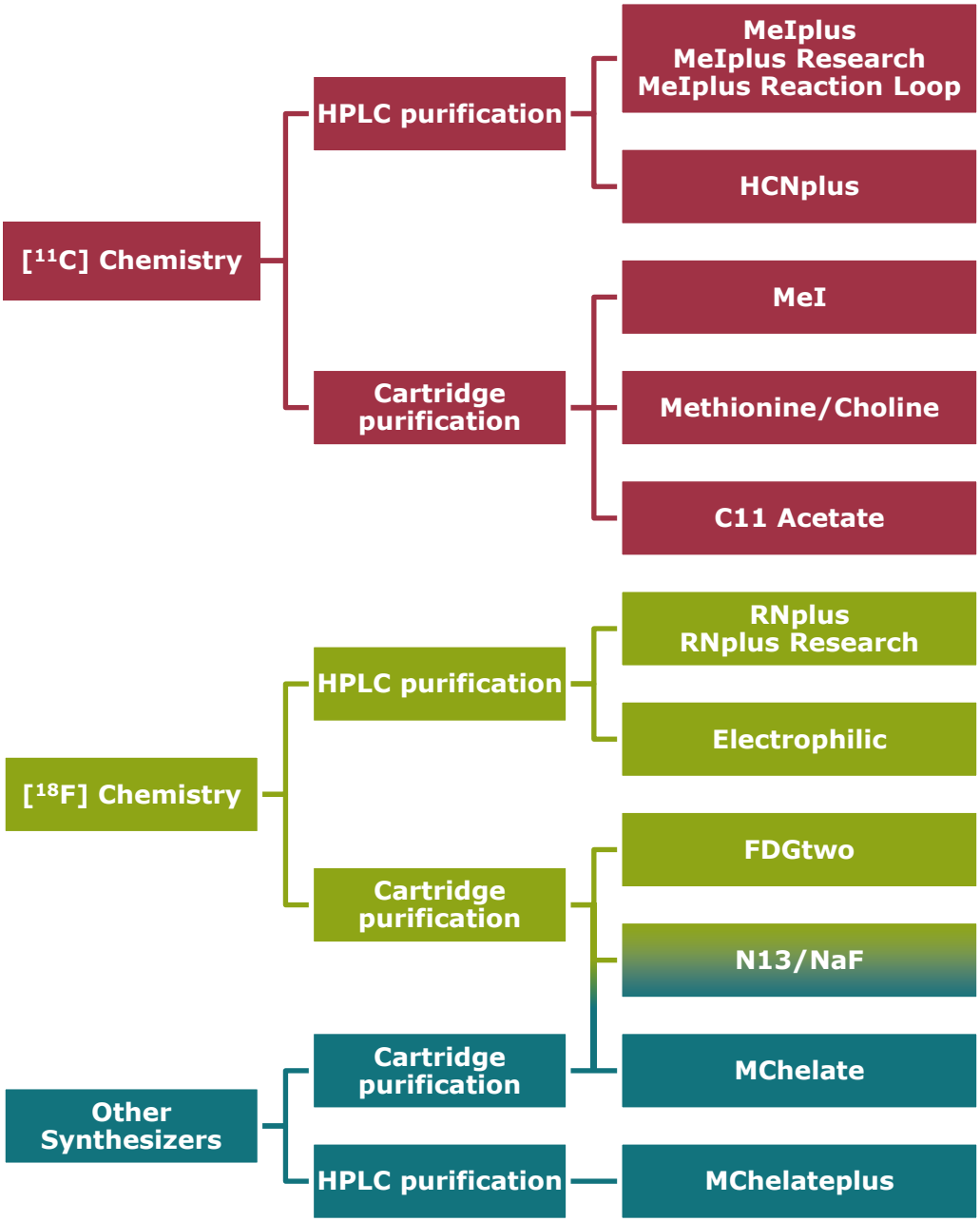

Each group is split into devices with an integrated Radio-/UV-HPLC and devices for cartridge purification.

[^{11}C] Chemistry

Within the [^{11}C] modules the HPLC purification group the MeIplus family gathers different modules based on the gas phase production of [^{11}C]MeI/[^{11}C]MeOTf with a final product purification by an integrated HPLC and solid phase extraction (SPE). Whereas the HCNplus is for the routine production of [^{11}C]HCN based tracer like [^{11}C]L-glutamine.

The cartridge based modules are designed for the production of [^{11}C]MeI/[^{11}C]MeOTf with the MeI module for transferring this intermediate to another synthesizer for further formulation. Also tracers like [^{11}C]methionine or [^{11}C]choline can be synthesized with the specialized Methionine/Choline module. Synthra's Acetate module has no gas phase reaction part. This module is configured for Grignard reactions with [^{11}C]CO_2 to [^{11}C]acetate.

[^{18}F] Chemistry

The modules for [^{18}F] tracers with an integraded HPLC are compiled in the RNplus family. The RNplus and RNplus Research process [^{18}F]fluorine by nucleophilic substitution into nearly every tracer. Another system with integrated HPLC is Synthra's Electrophilic module using [^{18}F]F_2 gas for the labeling of specific precursors.

Beside this group, Synthra also designed cartridge based modules. There are the FDGtwo for the [^{18}F]FDG production on one hand and the small N13/NaF synthesizer that can be used for [^{18}F]NaF or [^{13}N]ammonia on the other hand.

Other Synthesizers

For the work with radioactive metals, Synthra offers the MChelateplus module with HPLC purification and the MChelate for cartridge purification. These modules are convenient systems for the chelation reaction of any radiometal isotope.

6 [^{11}C] Chemistry

All Synthra [^{11}C] modules are based on the gas phase conversion of [^{11}C]CO_2 to either [^{11}C]MeI, [^{11}C]MeOTf, [^{11}C]HCN or [^{11}C]Acetate.

MeI production: The target [^{11}C]CO_2 is reduced to [^{11}C]CH_4 and further converted to [^{11}C]MeI.

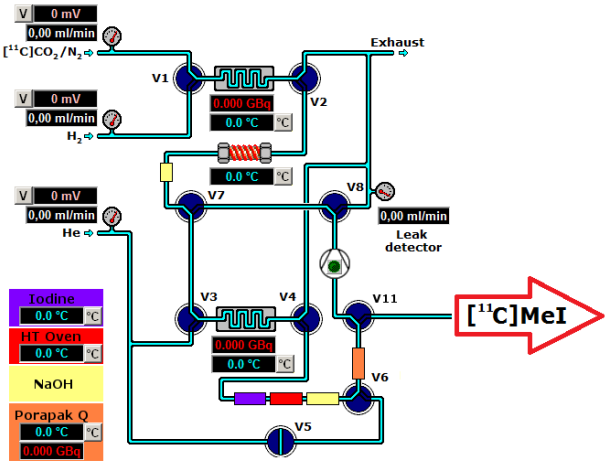

Using in-target produced carbon dioxide, high specific activity preparations are produced, ranging from 5 Ci/µmol to 20 Ci/µmol.

Higher specific activities are possible by using a methane target.

The [^{11}C]CO_2 produced in target is quantitatively trapped in the stainless steel capillary tubing at -180 °C. Subsequently, the [^{11}C]CO_2 is released into the methane oven to convert it to [^{11}C]CH_4 by reduction on a Ni-catalyst. The [^{11}C]CH_4 is trapped at -120 °C on Carboxen®. In a successive gas phase reaction the iodination of [^{11}C]CH_4 to [^{11}C]MeI is carried out in a gas phase recirculation system with gaseous I_2 at 730 °C. During circulation the produced [^{11}C]MeI accumulates on a Porapak™ column. Finally, it is released at 200 °C and ready for any kind of labeling reaction.

Up to 10 sequential methyl iodide preparations are possible from a single box set-up.

Methyl triflate production: The [^{11}C]MeI can be converted to [^{11}C]MeOTf in a dedicated column oven with silver triflate. The conversion yield from methyl iodide is 95 %.

HCN production: Alternatively, [^{11}C]CH_4 is released with NH_3 gas into the HCN column oven where it undergoes a Pt catalyzed conversion to [^{11}C]HCN.

Acetate production: With Synthra's C11 Acetate it is possible to directly convert [^{11}C]CO_2 to [^{11}C]Acetate via a Grignard reaction with CH_3MgBr.

Starting from [^{11}C]MeI, [^{11}C]MeOTf or [^{11}C]HCN the modules are able to process these intermediates by homogenous or heterogenous reactions to final tracers for medical use.

For further detailed information regarding gas phase reactions and gas phase options see chapter 6.1 and chapter 6.4.

Some of the tracers that can be synthesized with the [^{11}C] Synthra modules are listed below:

[^{11}C]Radiotracer	**Target**	**Application**
[^{11}C]Choline	Choline kinase	Brain tumors, prostate, lung and esophageal cancer
[^{11}C]Methionine	Amino acid transporter	Brain, head and neck, lung and breast cancer, lymphomas
[^{11}C]Acetate	TCA cycle fatty acid synthetase	Renal, pancreatic and prostate tumors
[^{11}C]Flumazenil	Benzodiazepine receptor	Neurodegenerative diseases
[^{11}C]DASB	SERT receptors	Neuropsychiatric disorders
[^{11}C]PK11195	Peripheral-type benzodiazepine receptor	Neurodegenerative diseases, including Alzheimer's disease, Wernicke's encephalopathy, multiple sclerosis and epilepsy
[^{11}C]MHED	Norepinephrine transporter (NET), vesicular monoamine transporter (VMAT), neuronal storage vesicle	Sympathetic nervous system
[^{11}C]Raclopride	D_2 dopamine receptors	Neuropsychiatric disorders
[^{11}C]PIB	Aggregates of Amyloid-beta peptide	Neuronal degeneration and cell death, senile plaques in the brain. Alzheimer's disease
[^{11}C]Glutamine	Neutral amino acid transporter (SLC1A5), glutaminase	Brain tumors, cancer proliferation
[^{11}C]Thymidine	Thymidine kinase-1	Tumor proliferation
[^{11}C]PHNO	D_2 dopamine receptors	Parkinson disease
[^{11}C]UCB-J	Synaptic vesicle glycoprotein 2A	Alzheimer's disease, schizophrenia, depression

6.1 Labeling Step and Reaction Options

Synthra offers different hardware options to process the methylation step and further reactions:

6.1.1 Reaction Vessel

The reaction vessel is the standard feature to perform all types of reactions (methylation, hydrolysis, deprotection, etc.). During methylation, the labeling agent ([^{11}C]MeI or [^{11}C]MeOTf) is trapped in the reaction vessel to subsequently add the precursor. [^{11}C]CO_2 can also be transferred into the reaction vessel directly, to perform Grignard reactions. SPE, cartridge- and HPLC-purification are available after the reaction step, if required.

6.1.2 Reaction on Cartridges and Column Ovens

Our modules are equipped with cartridge holders suitable for cartridge purification and cartridge reactions. The triflate oven, typically used to convert [^{11}C]MeI to [^{11}C]MeOTf, is alternatively also suitable as column oven for heated cartridge reactions.

6.1.3 Reaction Loop

Loop chemistry, the radiochemical equivalent of flow chemistry, is a particularly efficient strategy that has been widely used for radiolabeling bioactive molecules with [^{11}C]carbon. This method was developed by Alan A. Wilson.[1]

Loop chemistry is suitable for preparation of a wide range of tracers via methylation. In order to conduct loop chemistry, a solution of the precursor is deposited as a thin film on the inside of a stainless steel loop. This creates a larger surface area for the labeling agent ([^{11}C]MeI, [^{11}C]MeOTf, [^{11}C]CO_2, etc.) to react on as it is passed through the loop to generate the radiolabeled product. The loop content is then injected directly onto the HPLC for purification.

The main advantage compared to the traditional reaction vessel is that loop chemistry does not require the use of large solvent quantities and allows the use of highly concentrated precursor solutions. This results in improved methylation rates and reduces unwanted side reactions.

[1] Nuclear Medicine & Biology, Vol. 27, pp. 529–532, 2000

6.1.4 Illumination insert

For certain labeling reactions it is necessary to be able to observe if the reaction mixture changes from one color to another. For that reason, Synthra developed an insert for the common ovens with a small window and equipped with a white LED. This enables the user to observe the progress of the reaction. The heating and cooling capability is ensured using a thermal conductive brass alloy.

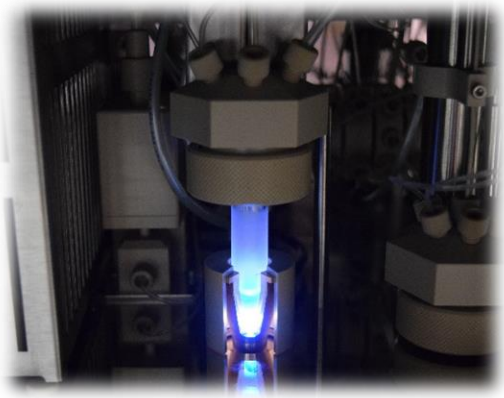

*vessel filled with blue reagent

6.1.5 Photoreactor

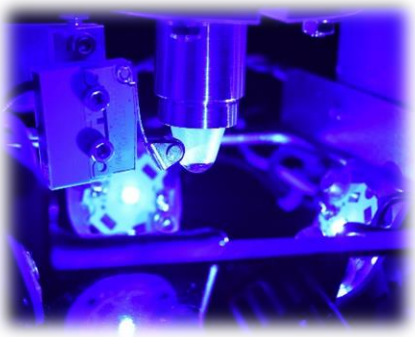

The treatment of the reaction mixture with light of a specific wavelength is of great importance for some novel syntheses. Here, the tracer synthesis takes place through photocatalytic reactions, for which irradiation is necessary. For example [^{11}C]PHNO and [^{11}C]UCB-J are two examples of clinically used tracers that can easily be synthesized in one step by this procedure.[2] Therefore, Synthra has developed a photoreactor that allows the customer to expose the reaction vessel to four high-power 450 nm LEDs. Other wavelengths are available upon request.

[2] Nature, Vol. 589, pp. 542–547, 2021.

6.2 [^{11}C] Radiosynthesizers - Overview

Synthra MeIplus Family			
	MeIplus	MeIplus Research	MeIplus Reaction Loop
Reaction loop	-	-	1
Reaction vessel	1 × 3 mL	2 × 3 mL	-
Cartridge/Triflate oven	1	1	1
Reagent vials	7	10	5
Radio-UV-HPLC system	Isocratic HPLC	Quaternary gradient HPLC	Isocratic HPLC
SPE units	1	1	1
Cartridge holders	1	3	1

Other [^{11}C] Synthesizers			
MeI	Methionine/Choline	C11 Acetate	HCNplus
[^{11}C] Gas Phase Module • [^{11}C]MeI • Multiple connection to tracer synthesis modules • [^{11}C]MeOTf option available	**[^{11}C] Production Module** • [^{11}C]Choline & [^{11}C]Methionine • Loop chemistry • Cartridge purification • Easy and cost effective	**[^{11}C] Production Module** • [^{11}C]Acetate Production	**[^{11}C]HCN Production and Labeling Module** • >50 HCN syntheses from one setup • >50% (ndc) yield in 5 min • 2 reaction vessels

6.3 [^{11}C] Radiosynthesizers

6.3.1 Synthra MeIplus (Catalog No. 003)

Synthra MeIplus is a flexible and completely automated radiosynthesizer for the efficient production of [^{11}C]labeled compounds based on the generation of gas-phase production of [^{11}C]methyl iodide and [^{11}C]methyl triflate. Automating the synthesis is simple with the easy-to-use SynthraView software. The Synthra MeIplus module offers both, fully automatic and manual modes of operation.

[^{11}C]Labeling Possibilities

- ✓ **[^{11}C]Methyl iodide production:** [^{11}C]MeI is ready for release 7 minutes after trapping the [^{11}C]CO2. The yield for the [^{11}C]methyl iodide formation under good conditions is above 50 % non-decay corrected (ndc).
  - Up to 10 sequential methyl iodide preparations are possible from a single box set-up.
- ✓ **Methyl triflate production:** The [^{11}C]MeI can be converted to [^{11}C]MeOTf by passing through a silver triflate filled column at 180 °C. The conversion yield from methyl iodide is 95 %.
  - Both [^{11}C]MeI and [^{11}C]MeOTf can be used for solid support heterogeneous reactions (e.g. [^{11}C]choline, [^{11}C]methionine) or can be released into the reaction vessel for homogeneous reactions.
- ✓ **Acetate production:** The purified [^{11}C]CO2 is passed into the reaction vessel for Grignard reactions.

Additional Synthesis Options

➔ **Methane option**: A reduced gas phase suitable for the use of a CH_4 target

➔ **[^{11}C]CO** (Catalog No. 003co): After purification, the [^{11}C]CO_2 is released into the column oven for Zn- or Mo-catalyzed reduction to [^{11}C]CO.

➔ **Loop option** (Catalog No. 003lo): A heatable and coolable reaction loop is integrated in the synthesis route to reduce synthesis time.

General Features

- ✓ **Heating and cooling capabilities**
  - Eight heating zones
  - Five with cooling capabilities
  - Temperature range: -196 °C - 950 °C
- ✓ **Detectors and controllers**
  - Six shielded radiation detectors
  - Three electronic flow controllers
  - Three pressure sensors
- ✓ **Dispensers and valves**
  - HR-dispenser (up to 50.000 steps, 2.5/5 mL)

- HPLC pneumatic injection valve (1.5 mL sample loop)
- Three spare valves for customization
- Chemically inert valves with small dead volume < 35 µL, 5 bar rated

✓ **Self-cleaning system**

✓ **Size** (w × d × h): 52 × 50 × 48 cm

✓ **Weight:** approx. 40 kg

Synthesis Features

✓ **Closed 3 mL reaction vessel** (-196 °C - 200 °C) with integrated cooling to reduce synthesis time (min. volume: 50 µL)

✓ **Triflate/column oven** (RT – 200 °C)

✓ **Seven reagent vials**

- Five small (1 – 3 mL) and two large (10 – 15 mL) volume glass vials for reagents

✓ **One additional cartridge holder**

✓ **Built-in preparative radio/UV-HPLC system** for in-process purification and final product collection (max flow: 40 mL/min)

- Fixed wavelength LED detector with 255 nm or 280 nm
- Optional: Quaternary gradient
- One HPLC semi-preparative column

✓ **SPE unit** for final product formulation

Additional Synthesis Options

➔ **Product solvent evaporator** (Catalog No. 000pse)

➔ **Variable wavelength UV detector option** (Catalog No. 000vuv)

GMP Features

✓ Synthesis files for several [^{11}C]radiotracers like methionine and PIB available

✓ **GMP compliant.** Electronic control and data collection (27/18 channels)

✓ **21CFRpart11 & LIMS** compatible

Terminal Control

✓ A laptop (Win 10 Pro) and SynthraView are included

✓ Four digital inputs for communication with external devices upon request

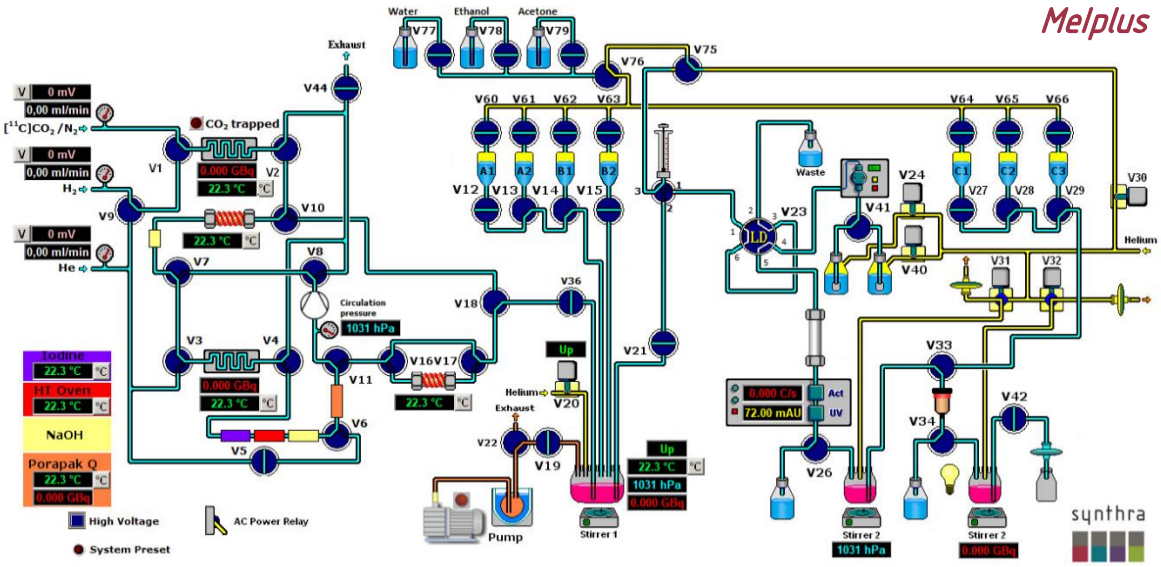

The Graphical User Interface (GUI) of the SynthraView software.

6.3.2 Synthra MeIplus Research (Catalog No. 003r)

Synthra MeIplus Research is a flexible and completely automated radiosynthesizer for the efficient production of [^{11}C] labeled compounds based on the generation of gas-phase [^{11}C]methyl iodide and [^{11}C]methyl triflate. It is specially designed to perform the required multi-step synthesis for example for using [^{11}C]propylation. Automation of the synthesis is simple, with the easy-to-use SynthraView software. The Synthra MeIplus Research module offers both, fully automatic and manual modes of operation.

[^{11}C]Labeling Possibilities

- ✓ **[^{11}C]Methyl iodide production**: [^{11}C]MeI is ready for release 7 minutes after trapping the [^{11}C]CO_2. The yield for the [^{11}C]methyl iodide formation under good conditions is above 50 % non-decay corrected (ndc).
  - Up to 10 sequential methyl iodide preparations are possible from a single box set-up.
- ✓ **Methyl triflate production**: The [^{11}C]MeI can be converted to [^{11}C]MeOTf by passing through a silver triflate filled column at 180 °C. The conversion yield from methyl iodide is 95 %.
  - Both [^{11}C]MeI and [^{11}C]MeOTf can be used for solid support heterogeneous reactions (e.g. [^{11}C]choline, [^{11}C]methionine) or can be released into the reaction vessel for homogeneous reactions.
- ✓ **Acetate production**: The purified [^{11}C]CO_2 is passed into the reaction vessel for Grignard reactions.

Additional Synthesis Options

- ➔ **Methane option**: A reduced gas phase suitable for the use of a CH_4 target
- ➔ **[^{11}C]CO** (Catalog No. 003co): After purification, the [^{11}C]CO_2 is released into the column oven for Zn- or Mo-catalyzed reduction to [^{11}C]CO.

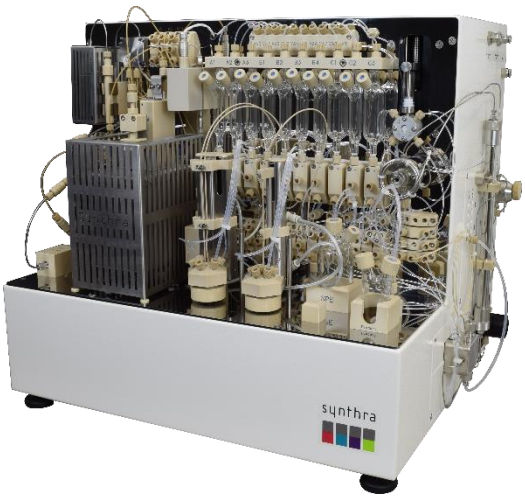

- ➔ **[^{11}C]HCN** (Catalog No. 003hcn): The [^{11}C]CH_4 is released with NH_3 gas into a high temperature area where it undergoes a Pt-catalyzed conversion into [^{11}C]HCN at 950 °C.
- ➔ **Loop option** (Catalog No. 003lo): A heatable and coolable reaction loop is integrated in the synthesis route to reduce synthesis time.

General Features

- ✓ **Heating and cooling capabilities**
  - Nine heating zones
  - Six with cooling capabilities
  - Temperature range: -196 °C - 950 °C
- ✓ **Detectors and controllers**
  - Six shielded radiation detectors
  - Three electronic flow controllers (HCN option: Four flow controllers)
  - Four Pressure sensors

- ✓ **Dispensers and valves**
  - HR-dispenser (up to 50.000 steps, 2.5/5 mL)
  - HPLC pneumatic injection valve (1.5 mL sample loop)
  - Five spare valves for customization
  - Chemically inert valves with small dead volume < 35 µL, 5 bar rated
- ✓ Self-cleaning system **option**
- ✓ **Size** (w × d × h): 55 × 50 × 48 cm
- ✓ **Weight:** approx. 40 kg

Synthesis Features

- ✓ **Two closed reaction vessel** (-196 °C - 200 °C) with integrated cooling to reduce synthesis time
  - 3 mL reaction vessel (minimum volume: 50 µL)
- ✓ **Triflate/column oven** (RT – 200 °C)
- ✓ **Ten reagent vials**
  - Eight small (1 – 3 mL) and two large (10 - 15 mL) volume glass vials for reagents
- ✓ Three additional cartridge holders
  - **Built-in preparative radio/UV-HPLC system** for in-process purification and final product collection (max flow: 40 mL/min) Fixed wavelength detector with 255 nm or 280 nm
  - **Quaternary gradient**
  - One HPLC semi-preparative column
- ✓ **SPE unit** for final product formulation

Additional Synthesis Options

➔ **Product solvent evaporator** (Catalog No. 000pse)

➔ **Variable wavelength UV detector option** (Catalog No. 000vuv)

GMP Features

- ✓ Synthesis files for several [^{11}C]radiotracers available
- ✓ **GMP compliant.** Electronic control and data collection (27/18 channels)
- ✓ **21CFRpart11 & LIMS** compatible

Terminal Control

- ✓ A laptop (Win 10 Pro) and SynthraView are included
- ✓ Four digital inputs for communication with external devices upon request

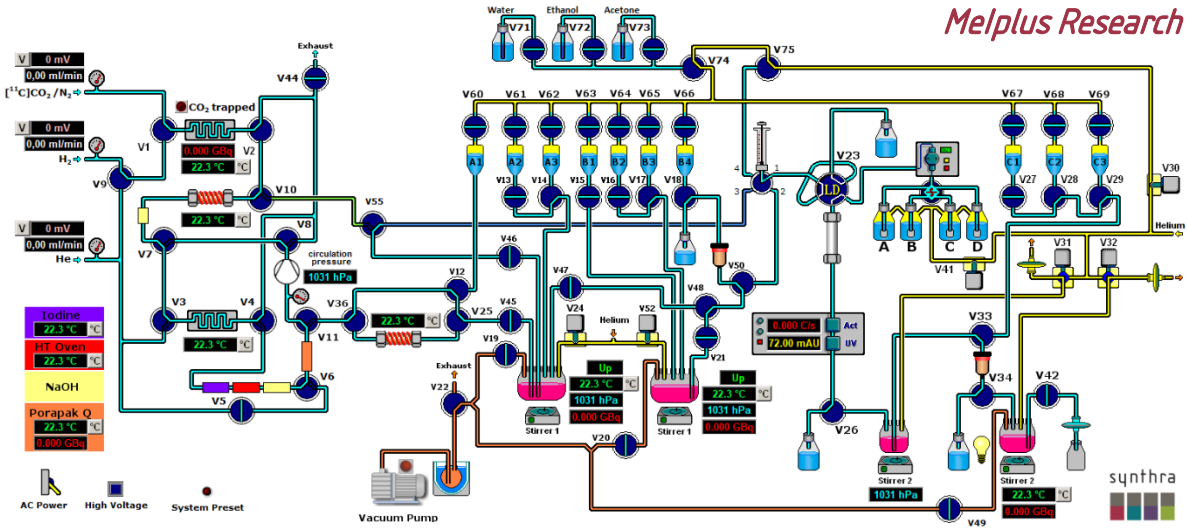

The Graphical User Interface (GUI) of the SynthraView software.

6.3.3 Synthra MeIplus Reaction Loop (Catalog No. 0031)

Synthra MeIplus Reaction Loop is a flexible and completely automated radiosynthesizer for the efficient production of [^{11}C]labeled compounds based on the generation of gas-phase [^{11}C]methyl iodide and [^{11}C]methyl triflate. Automating the synthesis is simple with the easy-to-use SynthraView software. The Synthra MeIplus Reaction Loop module offers both, fully automatic and manual modes of operation.

[^{11}C]Labeling Possibilities

- ✓ **[^{11}C]Methyl iodide production**: [^{11}C]MeI is ready for release 7 minutes after trapping the [^{11}C]CO_2. The yield for the [^{11}C]methyl iodide formation under good conditions is above 50 % non-decay corrected (ndc).
  - Up to 10 sequential methyl iodide preparations are possible from a single box set-up.
- ✓ **Methyl triflate production**: The [^{11}C]MeI can be converted to [^{11}C]MeOTf by passing through a silver triflate filled column at 180 °C. The conversion yield from methyl iodide is 95 %.
  - The [^{11}C]methyl iodide or [^{11}C]methyl triflate can either be directed into the loop for homogeneous captive chemistry reactions developed by Alan Wilson or can be used for solid support reactions for the synthesis of e.g. [^{11}C]methionine.
  - The conversion efficiency of the loop system is better than 95%. Labelling efficiency is depending on the quality of the precursor solution.
  - Acetate production: The purified [^{11}C]CO_2 is passed into the reaction loop for Grignard reactions.

General Features

- ✓ **Heating and cooling capabilities**
  - Eight heating zones
  - Five with cooling capabilities
  - Temperature range: -196 °C - 950 °C

- ✓ **Detectors and controllers**
  - Six shielded radiation detectors
  - Three electronic flow controllers
  - Two Pressure sensors
- ✓ **Dispensers and valves**
  - HPLC pneumatic injection valve (1.5 mL sample loop)
  - Three spare valves for customization
  - Chemically inert valves with small dead volume < 35 µL, 5 bar rated
- ✓ **Size** (w × d × h): 52 × 50 × 48 cm
- ✓ **Weight:** approx. 40 kg

Synthesis Features

- ✓ **Capillary reaction loop** with integrated cooling (-196 °C – 200 °C) to reduce synthesis time
- ✓ **Triflate/column oven** (RT – 200 °C)

- ✓ **Five reagent vials**
  - Three small (1 – 3 mL) and two large (10 – 15 mL) volume glass vials for reagents
- ✓ One additional cartridge holder
- ✓ **Built-in preparative radio/UV-HPLC system** with isocratic pump for in-process purification and final product collection (max flow: 40 mL/min)
  - Fixed wavelength LED detector with 255 nm or 280 nm
  - Optional: Quaternary gradient
  - One HPLC semi-preparative column
- ✓ **SPE unit** for final product formulation

Additional Synthesis Options

➔ **Methane Option**: A reduced gas phase suitable for the use of a CH_4 target.

➔ **Product solvent evaporator** (Catalog No. 000pse)

➔ **Variable wavelength UV detector option** (Catalog No. 000vuv)

GMP Features

- ✓ Synthesis files for several tracers are available
- ✓ **GMP compliant.** Electronic control and data collection (27/18 channels)
- ✓ **21CFRpart11 & LIMS** compatible

Terminal Control

- ✓ A laptop (Win 10 Pro) and SynthraView are included
- ✓ Four digital inputs for communication with external devices upon request

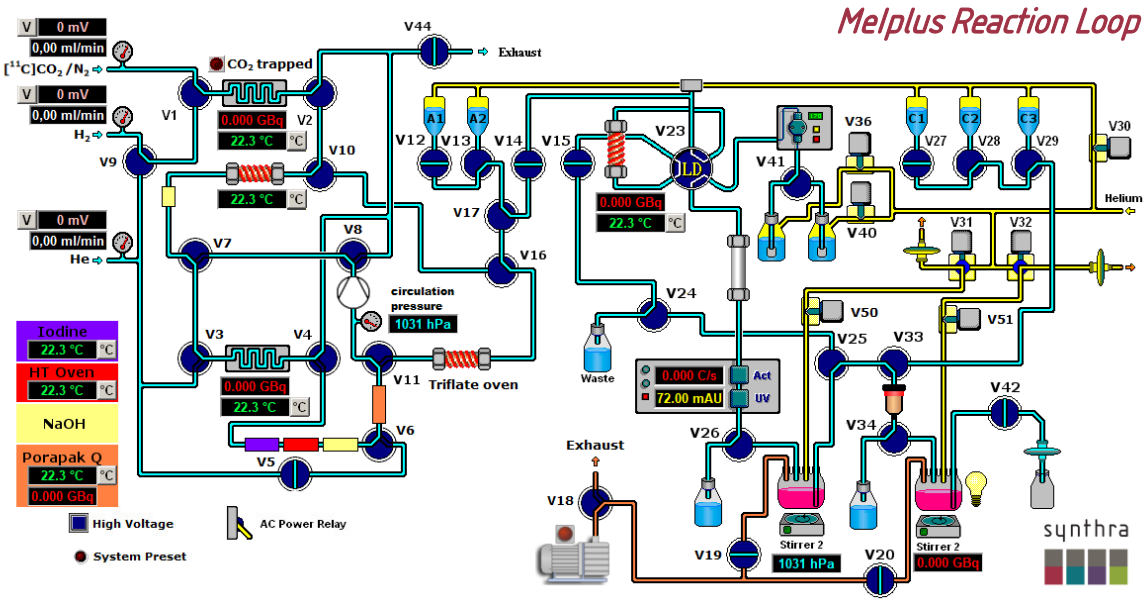

The Graphical User Interface (GUI) of the SynthraView software.

6.3.4 Synthra MeI (MeOTf) (Catalog No. 005)

Synthra MeI is a flexible and completely automated radiosynthesizer for the efficient production of [^{11}C]methyl iodide and [^{11}C]methyl triflate. Automating the synthesis is simple with the easy-to-use SynthraView software. The Synthra MeI module offers both, fully automatic and manual modes of operation.

[^{11}C]Labeling Possibilities

- ✓ **[^{11}C]Methyl iodide production**: [^{11}C]MeI is ready for release 7 minutes after trapping the [^{11}C]CO_2. The yield for the [^{11}C]methyl iodide formation under good conditions is above 50 % non-decay corrected. (ndc).
  - Up to 10 sequential methyl iodide preparations are possible from a single box set-up.
- ✓ **Methyl triflate production**: The [^{11}C]MeI can be converted to [^{11}C]MeOTf by passing through a silver triflate filled column at 180 °C. The conversion yield from methyl iodide is 95 %.

General Features

- ✓ **Heating and cooling capabilities**
  - Seven heating zones
  - Four with cooling capabilities
  - Temperature range: -196 °C - 950 °C
- ✓ **Detectors and controllers**
  - Three shielded radiation detectors
  - Three electronic flow controllers (HCN option: Four flow controller)
  - One pressure sensor as leak detector
- ✓ **Chemically inert valves** with small dead volume < 35 µL, 5 bar rated
- ✓ **Size** (w × d × h): 30 × 50 × 48 cm
- ✓ **Weight:** approx. 20 kg

Synthesis Features

- ✓ **Triflate/column oven** (RT – 200 °C)

Additional Gas Phase Options

- ✓ **Methane option:** A reduced gas phase suitable for the use of a CH_4 target
- ✓ **[^{11}C]HCN** (Catalog No. 003hcn): The [^{11}C]CH_4 is released with NH_3 gas into a high temperature area where it undergoes a Pt-catalyzed conversion into [^{11}C]HCN at 950 °C.

GMP Features

- ✓ Synthesis files for [^{11}C]MeI and MeOTf
- ✓ **GMP compliant.** Electronic control and data collection (27/18 channels)
- ✓ **21CFRpart11 & LIMS** compatible

Terminal Control

- ✓ A laptop (Win 10 Pro) and SynthraView are included
- ✓ Four digital inputs for communication with external devices

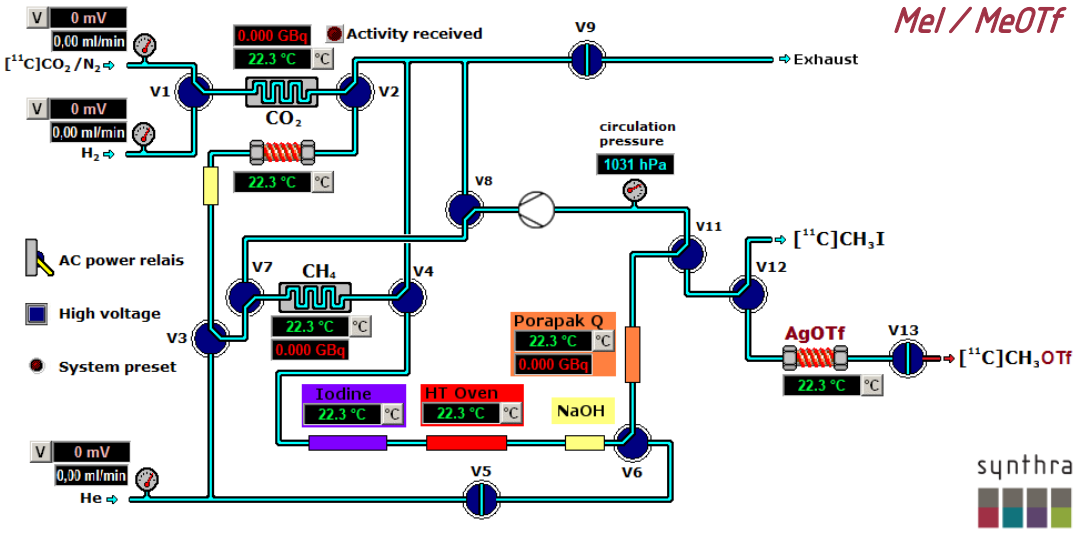

The Graphical User Interface (GUI) of the SynthraView software.

6.3.5 Synthra Methionine/Choline (Catalog No 007)

Synthra Methionine/Choline is a specially designed radiosynthesizer for the efficient production of [^{11}C]labeled compounds [^{11}C]methionine and [^{11}C]choline. Automating the synthesis is simple with the easy-to-use SynthraView software. The Synthra Methionine/Choline module offers both, fully automatic as well as manual modes of operation.

[^{11}C]Labeling Possibilities

- ✓ **[^{11}C]Methyl iodide Production**: [^{11}C]MeI is ready for release 7 minutes after trapping the [^{11}C]CO_2. The yield for the [^{11}C]methyl iodide formation under good conditions is above 50 % non-decay corrected. (ndc).
  - Up to 10 sequential methyl iodide preparations are possible from a single box set-up.
  - The [^{11}C]methyl iodide can be used to synthesize [^{11}C]choline by captive chemistry in a loop or to synthesize [^{11}C]methionine by solid support heterogeneous reactions on a cartridge.

General Features

- ✓ **Heating and cooling capabilities**
  - Six heating zones
  - Three with cooling capabilities
  - Temperature range: -196 °C - 950 °C
- ✓ **Detectors and controllers**
  - Four shielded radiation detectors
  - Three electronic flow controllers (HCN option: Four flow controller)
  - One Pressure sensors as leak detector
- ✓ **Dispensers and valves**
  - Chemically inert valves with small dead volume < 35 µL, 5 bar rated
- ✓ **Size** (w × d × h): 42 × 50 × 41 cm
- ✓ **Weight**: approx. 25 kg

Synthesis Features

- ✓ **Four reagent vials**
  - One small (1 – 3 mL) and three large (10 - 15 mL) volume glass vials for reagents
- ✓ One cartridge holder
- ✓ **SPE unit** for final product formulation

Additional Synthesis Options

- ➔ **Methane option:** A reduced gas phase suitable for the use of a CH_4 target.
- ➔ **[^{11}C]HCN** (Catalog No. 003hcn): The [^{11}C]CH_4 is released with NH_3 gas into a high temperature area where it undergoes a Pt-catalyzed conversion into [^{11}C]HCN at 950 °C.
- ➔ **Triflate/column oven** (RT – 200 °C)
- ➔ Product solvent evaporator (Catalog No. 000pse)

GMP Features

- ✓ Synthesis files for[^{11}C]methionine and [^{11}C]choline
- ✓ **GMP compliant**. Electronic control and data collection (27/18 channels)
- ✓ **21CFRpart11** & **LIMS** compatible

Terminal Control

- ✓ A laptop (Win 10 Pro) and SynthraView are included
- ✓ Four digital inputs for communication with external devices upon request

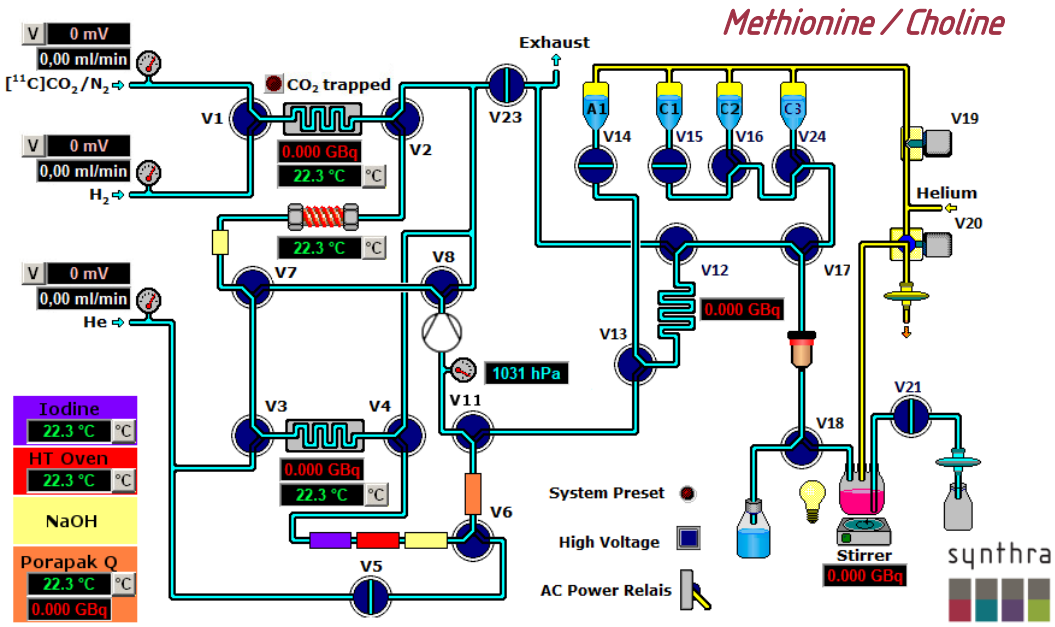

The Graphical User Interface (GUI) of the SynthraView software.

6.3.6 Synthra C11 Acetate (Catalog No. 011)

The Synthra C11 Acetate module is a completely automated radiosynthesizer for the efficient production of [^{11}C]acetate. The SynthraView software offers both, fully automatic as well as manual modes of operation of the Synthra C11 Acetate module.

[^{11}C]Labeling Possibilities

- ✓ **[^{11}C]Acetate production:** [^{11}C]Acetate is ready for release after only 12 min starting from trapping the [^{11}C]CO_2. The yield is better than 50 %.

General Features

- ✓ **Heating and cooling capabilities**
  - Two heating zones with cooling capabilities
  - Temperature range: -196 °C - 950 °C
- ✓ **Detectors and controllers**
  - Four shielded radiation detectors
  - Two electronic flow controllers
- ✓ **Chemically inert valves** with small dead volume < 35 µL, 5 bar rated
- ✓ **Size** (w × d × h): 42 × 50 × 41 cm
- ✓ **Weight:** approx. 25 kg

Synthesis Features

- ✓ **Four reagent vials**
  - Two small (1 – 3 mL) and two large (10 – 15 mL) volume glass vials for reagents
- ✓ Two cartridge holders
- ✓ **SPE unit** for final product formulation

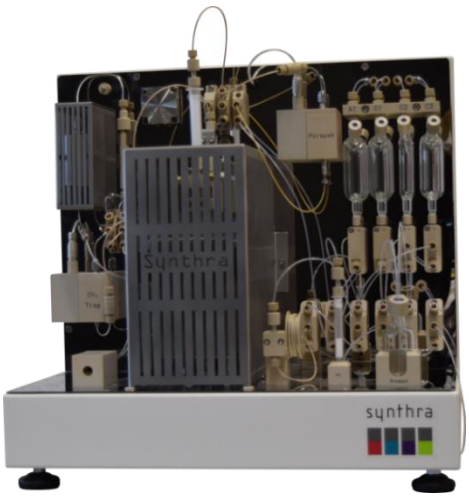

Additional Synthesis Options

➔ **Product solvent evaporator** (Catalog No. 000pse)

GMP Features

- ✓ Synthesis files for [^{11}C]acetate
- ✓ **GMP compliant.** Electronic control and data collection (27/18 channels)
- ✓ **21CFRpart11 & LIMS** compatible

Terminal Control

- ✓ A laptop (Win 10 Pro) and SynthraView are included
- ✓ Four digital inputs for communication with external devices upon request

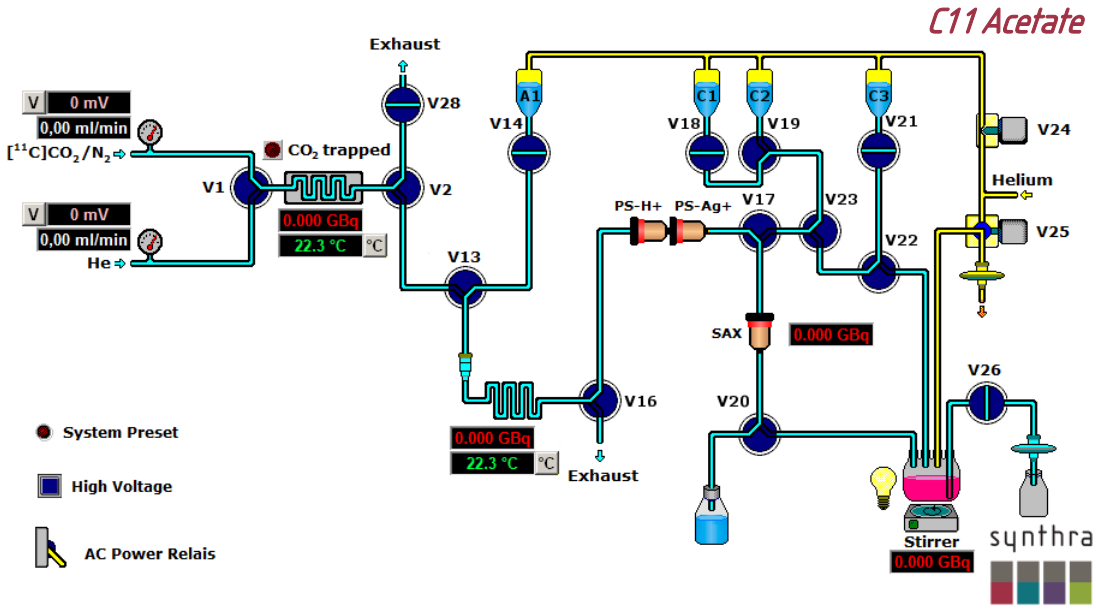

The Graphical User Interface (GUI) of the SynthraView software.

6.3.7 Synthra HCNplus (Catalog No. 012)

Synthra HCNplus is a flexible and completely automated synthesis system for routine production of [^{11}C]HCN generated by gas-phase synthesis with additional labeling possibilities and radio-HPLC purification and SPE separation and formulation setup for the desired tracer production. With easy-to-use SynthraView software, the Synthra HCNplus module offers both, fully automatic and manual modes of operation.

[^{11}C]Labeling Possibilities

- ✓ **[^{11}C]HCN production**: [^{11}C]HCN is ready for release after only 5 min starting from trapping the [^{11}C]CO_2. The yield is better than 70 %.
  - Up to 50 sequential HCN preparations are possible from a single box set-up.

General Features

- ✓ **Heating and cooling capabilities**
  - Six heating zones
  - Four with cooling capabilities
  - Temperature range: -196 °C - 950 °C
- ✓ **Detectors and controllers**
  - Six shielded radiation detectors
  - Four electronic flow controllers
  - Three pressure sensors
- ✓ **Self-cleaning system**
- ✓ **Dispensers and valves**
  - HR-dispenser (up to 50.000 steps, 2.5/5 mL)
  - HPLC pneumatic injection valve (1.5 mL sample loop)
  - Built-in preparative Radio/UV-HPLC system (0 – 40 mL/min) for product separation and fixed wavelength LED detector with 255 nm or 280 nm
  - Five spare valves for customization
  - Chemically inert valves with small dead volume < 35 µL, 5 bar rated
- ✓ **Size** (w × d × h): 55 × 50 × 48 cm
- ✓ **Weight:** approx. 40 kg

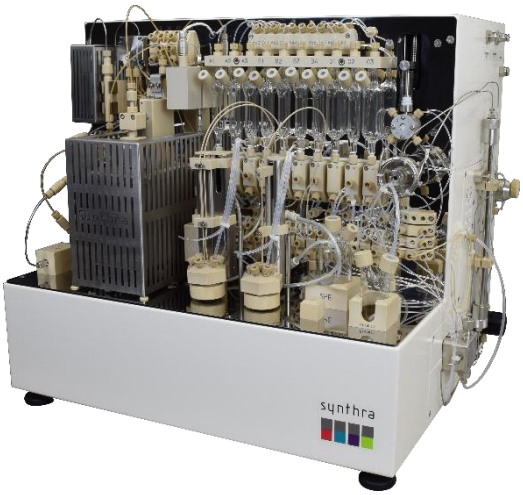

Synthesis Features

- ✓ **Two closed 3 mL reaction vessels** with integrated cooling (-196 °C – 200 °C) to reduce synthesis time (min. volume: 50 µl)
- ✓ **Ten reagent vials**
  - Three small (1 – 3 mL) and seven large (10 – 15 mL) volume glass vials for reagentAdditional Synthesis Options

➔ **Methane option:** A reduced gas phase suitable for the use of a CH_4 target.

➔ **[^{11}C]CO (Catalog No. 003co):** After purification, the [^{11}C]CO_2 is released into the column oven for Zn- or Mo-catalyzed reduction to [^{11}C]CO.

➔ **Product solvent evaporator** (Catalog No. 000pse)

➔ **Variable wavelength UV detector option** (Catalog No. 000vuv)

GMP Features

- ✓ Synthesis files for [^{11}C]HCN and several [^{11}C]radiotracers available
- ✓ **GMP/GLP compliant.** Electronic control and data collection (27/18 channels)
- ✓ **21CFRpart11 & LIMS** compatible

Terminal Control

- ✓ A laptop (Win 10 Pro) and SynthraView are included
- ✓ Four digital inputs for communication with external devices upon request

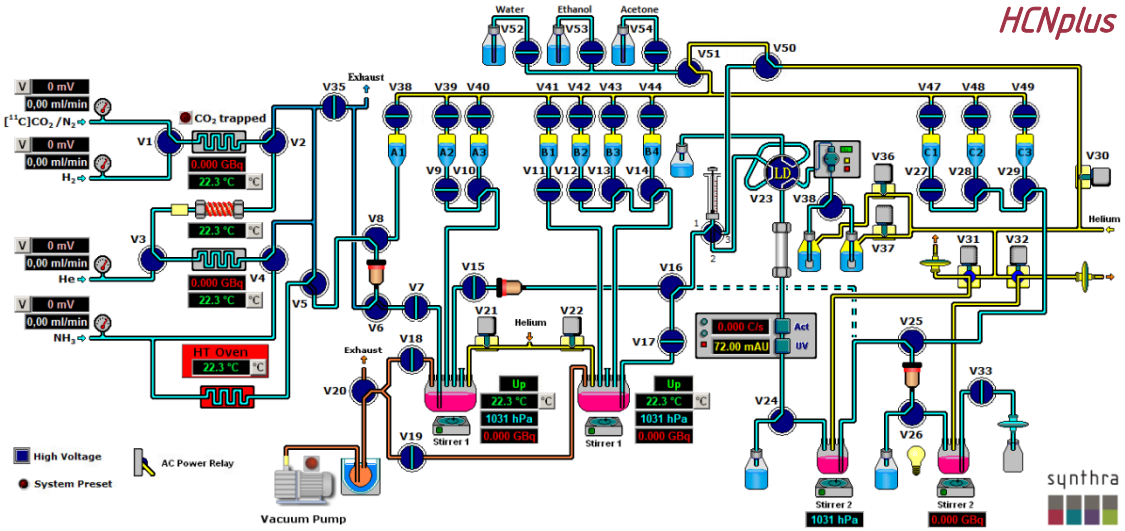

The Graphical User Interface (GUI) of the SynthraView software.

6.4 Additional [^{11}C] options

6.4.1 HCN option (Catalog No. 003hcn)

The HCN upgrade allows the production of [^{11}C]HCN labeling agent, besides standard [^{11}C]MeI and [^{11}C]MeOTf. The system is equipped with an additional platinum filled quartz tube and an ammonia flow controller.

The [^{11}C]CH_4 is released with NH_3 gas into the high temperature oven where it undergoes a Platinum catalyzed conversion into [^{11}C]HCN.

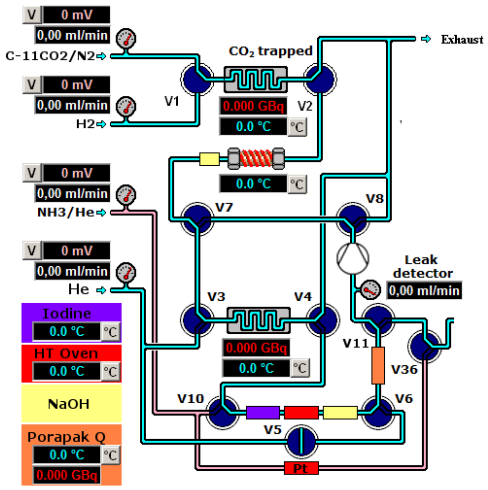

6.4.2 [^{11}C]CO option

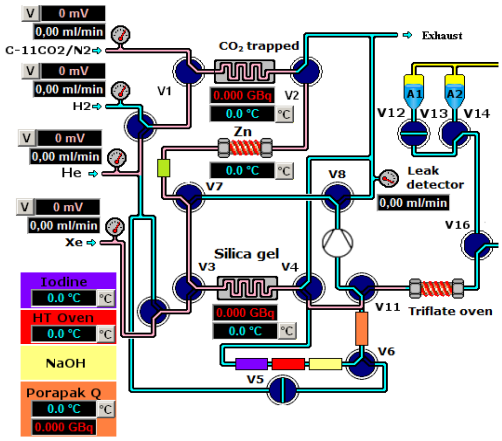

The CO upgrade allows the production of [^{11}C]carbon monoxide as labeling agent, besides standard [^{11}C]MeI and [^{11}C]MeOTf. The system is equipped with an additional Xenon flow controller and a zinc or molybdenum column.

After the target [^{11}C]CO_2 is purified in the trap, the carbon dioxide is released into the zinc or molybdenum column for catalyzed conversion to [^{11}C]CO.

6.4.3 CH_4 option

The CH_4 Option, as a downgrade for the module is suitable for the use of a methane target. The module is equipped with a reduced gas phase skipping the unnecessary CO_2 trap and nickel oven that typically is used to convert [^{11}C]CO_2 into [^{11}C]CH_4. This is a comfortable and economical solution for customers who exclusively work with a [^{11}C]methane target.

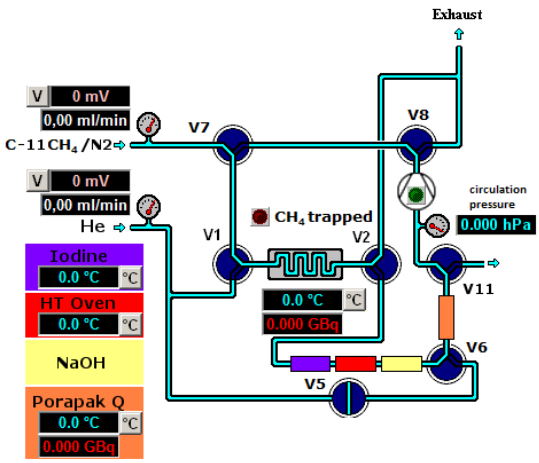

6.4.4 Loop option (Catalog No. 003lo)

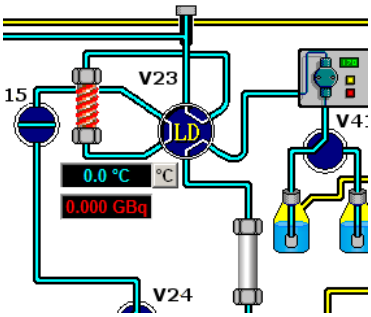

The loop option offers an additional opportunity for the labeling step. Thus, the [^{11}C]methyl iodide or [^{11}C]methyl triflate can be directed into the loop for homogeneous captive chemistry reactions.

The main advantage of loop chemistry, compared to the traditional reaction vessel, is that loop chemistry does not require the use of large solvent quantities and allows the use of highly concentrated precursor solutions which leads to improved methylation rates and reduces unwanted side reactions.

6.4.5 Illumination insert

With the optional illumination insert it is possible to observe the glass reaction vessel during the synthesis. It is inserted in the aperture of the [^{11}C] oven instead of the glass reaction vessel. Subsequently, the vessel itself is placed in the cutout of the insert. For a better visibility an additional white LED shines through the vessel to ensure that the color of the reaction mixture is clearly identifiable. The intensity of the LED enlightening the reaction mixture can be adjusted by the SynthraView software. The insert can be operated in a temperature range from -100 °C to 125 °C, heating and cooling capability is ensured by using a thermally conductive brass alloy.

6.4.6 Photoreactor

Synthra's external photoreactor is an extenstion to the Synthra module and operated by the SynthraView software. The reaction vessel of the module is placed in the photoreactor instead of the standard oven. Four high-power 450 nm LEDs start the reaction. The external photoreactor is equipped with a radiation detector to observe the transfer of the MeI into the vessel. It comes also with a safety switch, to ensure the LEDs are automatically switched off if the vessel is not inserted.

Other wavelengths are available upon request.

6.4.7 Product solvent evaporator (Catalog No. 000pse)

The product heater option offers the opportunity to evaporate solvent from the product solution. Using the heater achieves a higher concentrated product that is essential, for example for *in vivo* small animal studies. Another application is the optimization of the SPE elution step. Excess ethanol can easily be removed from the eluted product. This makes it possible to work with a larger volume of ethanol, giving higher yields. The product heating step can be integrated straightforward in any synthesis process.

6.4.8 Alternative wavelength UV/Vis detector option

In case it should be necessary to work with other wavelength than Synthra's standard UV-LED with 255 nm, it is possible to find a customized solution for your purpose.

On the one hand, it is possible to install other LED components to the factory-set UV/Vis detector. Available wavelengths are 255, 280, 300, 310, 400, 410, 415, 500, 545, 630, 730 nm. Other fixed wavelength cassettes are available on request. These LED cassettes are easy to exchange, no special tools are required. It is even possible to add a second wavelength to the one already included.

On the other hand, Synthra offers a fully automatic variable wavelength UV/Vis detector with a range from 190 nm to 900 nm. This detector can easily be controlled via the SynthraView Software and any wavelength can be set (Catalog No. 000vuv).

7 [^{18}F] Chemistry

From a chemical perspective Synthra's [^{18}F] radiosynthesizers are divided into two categories depending on the nature of the substitution step:

- Synthra's RNplus family as well as the FDGtwo and N13/NaF modules, based on [^{18}F]nucleophilic substitution labeling, are dedicated to the synthesis of a huge number of [^{18}F] radiotracers.
- Synthra's Electrophilic module is dedicated to the production of a variety of [^{18}F] labeled compounds by electrophilic fluorination.

To work with fluorocompounds all reaction vessels are made of glassy carbon, to avoid incorporation of fluorine into the glass of ordinary reaction vessels. This ensures better thermal conditions and better yields than achievable with glass vessels.

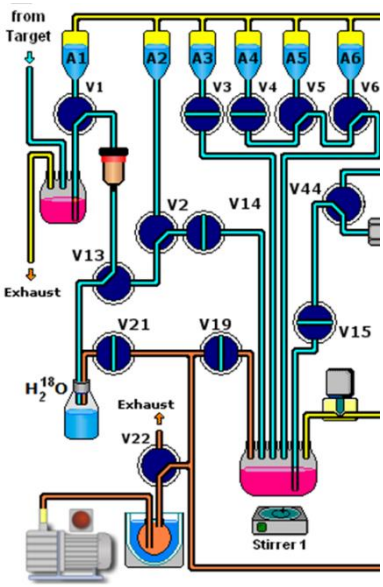

Each nucleophilic synthesizer contains a [^{18}O]H_2O recovery sub system to collect excess target water. The target activity is transferred via vacuum through the [^{18}F] separation cartridge to the recovery vial. Subsequently, the separation cartridge typically is eluted with K_2CO_3 solution, flushing the [^{18}F]F^- into the reaction vessel. A solution of Kryptofix 2.2.2 in acetonitrile is added and the solvent is evaporated. Alternatively, tributylammonium hydrogen carbonate (TBA) can be used instead of K_2CO_3/Kryptofix. Then the system is ready for precursor addition to undergo a [^{18}F]nucleophilic substitution.

The electrophilic synthesizer has been designed and optimized for the production of [^{18}F]F_2 based synthesis routines. The two methods to produce [^{18}F]F_2 are ^{20}Ne (d,α) ^{18}F nuclear reaction (generates about 200 mCi) and more common and recent, ^{18}O (p,n) ^{18}F nuclear reaction (generates up to 2 Ci of [^{18}F]F_2).

To control the target flow, chemically inert flow controllers are used that ensure optimal transfer of the [^{18}F]F_2 target gas in a separated reaction vessel (15 cm path length). The [^{18}F]F_2 then directly reacts with the dissolved precursor in an electrophilic substitution reaction.

[^{18}F] Chemistry

Some of the [^{18}F] labeled tracers that can be synthesized with the [^{18}F] Synthra modules are listed below:

[^{18}F]Radiotracer	**Target**	**Application**
[^{18}F]FLT	DNA proliferation	Tumor cell proliferation
[^{18}F]FDDNP	*ß*-Amyloid protein	Alzheimer disease
[^{18}F]Flumazenil	Benzodiazepine receptor	Epileptic foci
[^{18}F]FHBG	Gene expression	Cancer gene therapy
[^{18}F]Fluorocholine	Choline kinase	Prostate I tumor
[^{18}F]F-Miso	Hypoxic cell marker	Head and neck cancer
[^{18}F]F-Dopa	D_2 dopamine receptors	Neurodegenerative diseases
[^{18}F]FES	Estrogen receptors	Breasts cancer
[^{18}F]PSMA	Prostate cancer cells	Prostate cancer
[^{18}F]FET	L-type amino acid transporter system and Na+-dependent system B0	Brain cancer
[^{18}F]FDG	Glucose metabolism	Tumor diagnostic
[^{18}F]FBPA	L-type amino acid transporter 1	Abdominal cancer

7.1 [^{18}F] Radiosynthesizers - Overview

Synthra Nucleophilic [^{18}F] Radiosynthesizers				
	RNplus	RNplus Research	FDGtwo	N13/NaF*
Reaction vessel	1 × 7 mL 1 × 11 mL	1 × 7 mL 1 × 11 mL	2 × 11 mL	-
Cartridge oven	1	1	-	-
Reagent vials	15	16	12	3
Radio-UV-HPLC system	Isocratic HPLC	Quaternary gradient HPLC	-	-
SPE units	1	2	-	-
Cartridge holders	5	8	4	2

*For details on Synthra N13/NaF see chapter 8.4.1

Synthra Electrophilic	
Electrophilic	• One glass reaction vessel for F_2 gas trapping (15 mL; RT - 200°C) • Four reagent vials (3 × 1 mL and 1 × 15 mL) • Isocratic HPLC Unit • Variable UV/Vis detector

7.2 [^{18}F] Radiosynthesizers

7.2.1 Synthra RNplus (Catalog No. 004)

Synthra RNplus is a flexible and completely automated radio synthesis system for routine production of wide variety of [^{18}F]fluorine labeled compounds by nucleophilic substitution, with automated sequences for compounds like **[^{18}F]F-DOPA, [^{18}F]FDG, [^{18}F]FLT, [^{18}F]NaF, [^{18}F]FET, [^{18}F]FHBG, [^{18}F]PSMA 1007, [^{18}F]MISO, [^{18}F]FAZA, [^{18}F]FES** and **[^{18}F]Fluorocholine**. An automated sequence can be created for any other [^{18}F]labeled compound. Automation of the synthesis is simple, with the easy-to-use SynthraView software, the Synthra RNplus module offers both, fully automatic and manual modes of operation.

[^{18}F]Labeling Possibilities

- ✓ Synthesis of [^{18}F]F-DOPA, [^{18}F]FDG, [^{18}F]FLT, [^{18}F]NaF, [^{18}F]FET, [^{18}F]FHBG, [^{18}F]PSMA 1007, [^{18}F]MISO, [^{18}F]FAZA, [^{18}F]FES, [^{18}F]Fluorocholine and others
- ✓ Simple creation of user-defined synthesis methods
- ✓ The radio synthesis system has a dedicated sub system for the recovery and collection of [^{18}O]H_2O for the purification of the cyclotron produced [^{18}F]fluoride.
- ✓ The target activity is measured with a separate detector.

General Features

- ✓ **Heating and cooling capabilities**
  - Three heating zones with cooling capabilities
  - Temperature range: -50 °C– 200 °C
- ✓ **Detectors and controllers**
  - Five shielded radiation detectors
  - Three pressure sensors
- ✓ **Build-in vacuum pump** (<5 mbar)
- ✓ **Liquid nitrogen trap** for protecting the vacuum pump from radioactive volatiles

- ✓ **Built-in preparative radio/UV-HPLC system** with isocratic pump, fixed wavelength LED detector with 255 nm or 280 nm, HPLC column and one solid phase extraction (SPE)
- ✓ **Self-cleaning system**
- ✓ **Dispensers and valves**
  - HR-dispenser (up to 50.000 steps, 5 mL)
  - HPLC pneumatic injection valve (3 mL sample loop)
  - Three spare valves for customization
  - Chemically inert valves with small dead volume < 35 µL, 5 bar rated
- ✓ **Size** (w × d × h): 52 × 50 × 48 cm
- ✓ **Weight:** approx. 35 kg

Synthesis Features

- ✓ Two **glassy carbon reaction vessels** (one 5 mL, conic shape and 11 mL) and one **column oven** for a solid support reaction zone, allowing multiple step (homogenous and heterogeneous) synthesis reactions
- ✓ **15 reagent vials**
  - Seven small (1 – 3 mL) and eight large (10 – 15 mL) volume glass vials for reagents
- ✓ **Five cartridge holders** for in-process purification
- ✓ **SPE unit** for final product formulation

Additional Synthesis Options

- ➔ **Product solvent evaporator** (Catalog No. 000pse)
- ➔ **Mass flow controller option** (Catalog No. 004mfc)
- ➔ **Variable wavelength UV detector option** (Catalog No. 000vuv)
- ➔ **Quarternary gradient HPLC pump option** (Catalog No. 000qgp)

GMP Features

- ✓ Synthesis files for various tracers available
- ✓ **GMP compliant.** Electronic control and data collection (27/18 channels)
- ✓ **21CFRpart11 & LIMS** compatible

Terminal Control

- ✓ A laptop (Win 10 Pro) and SynthraView are included
- ✓ Four Digital inputs for communication with external devices upon request

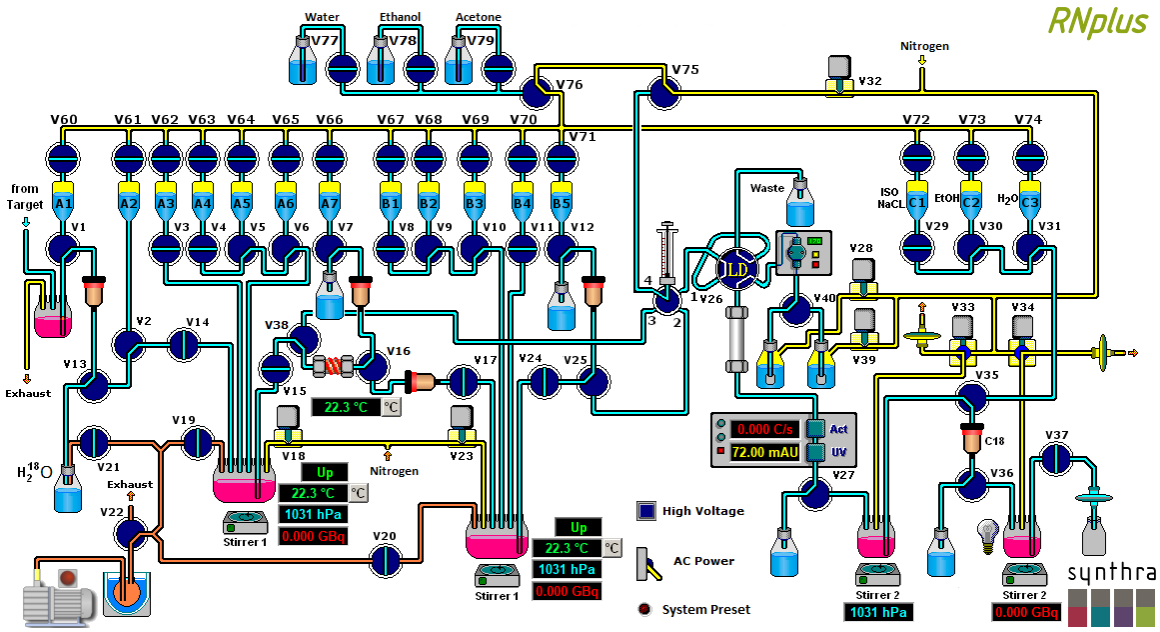

The Graphical User Interface (GUI) of the SynthraView software.

7.2.2 Synthra RNplus Research (Catalog No. 004r)

Synthra RNplus Research is a flexible and completely automated radio synthesis system for routine production of wide variety of [^{18}F]fluorine labeled compounds by nucleophilic substitution, with automated sequences for compounds like **[^{18}F]F-DOPA, [^{18}F]FDG, [^{18}F]FLT, [^{18}F]FHBG, [^{18}F]FDDNP, [^{18}F]MISO, [^{18}F]FAZA** and **[^{18}F]Fluorocholine**. As the bigger sibling of the RNplus, this module offers additional HPLC and SPE units and overall greater versatility for the production of nearly any [^{18}F]tracer. An automated sequence can be created for any [^{18}F]labeled compound. With the easy-to-use SynthraView software, the Synthra RNplus Research module offers both, fully automatic and manual modes of operation.

[^{18}F]Labeling Possibilities

- ✓ Synthesis of [^{18}F]F-DOPA, [^{18}F]FDG, [^{18}F]FLT, [^{18}F]NaF, [^{18}F]FHBG, [^{18}F]FDDNP, [^{18}F]MISO, [^{18}F]FAZA, [^{18}F]Fluorocholine and others
- ✓ Simple creation of user-defined synthesis methods
- ✓ Uses a dedicated sub system for the recovery and collection of [^{18}O]H_2O for the purification of the cyclotron produced [^{18}F]fluoride.
- ✓ The target activity is measured with a separate detector.

General Features

- ✓ **Heating and cooling capabilities**
  - Three heating zones with cooling capabilities
  - Temperature range: -50 °C – 200 °C
- ✓ **Detectors and controllers**
  - Five shielded radiation detectors
  - Three pressure sensors
- ✓ **Built-in preparative radio/UV-HPLC system** with quaternary gradient pump, fixed wavelength LED detector with 255 nm or 280 nm, column switching valve, two HPLC columns and two solid phase extractions (SPE)
- ✓ **Dispensers and valves**
  - HR-dispenser (up to 50.000 steps, 5 mL)

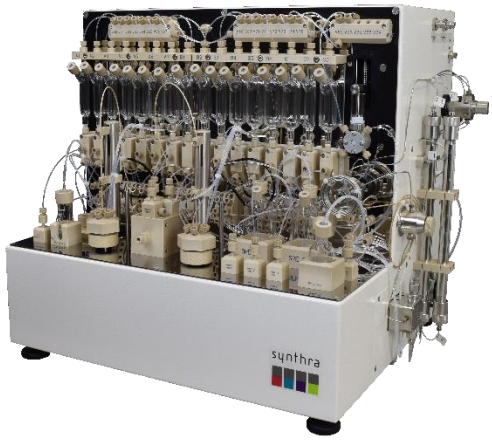

  - HPLC pneumatic injection valve (3 mL sample loop)
  - Three spare valves for customization
  - Chemically inert valves with small dead volume < 35 µL, 5 bar rated
- ✓ **Build-in vacuum pump** (<5 mbar)
- ✓ **Liquid nitrogen trap** for protecting the vacuum pump from radioactive volatiles
- ✓ **Self-Cleaning System**
- ✓ **Size** (w × d × h): 52 × 50 × 48 cm
- ✓ **Weight:** approx. 35 kg

Synthesis Features

- ✓ Two **glassy carbon reaction vessels** (one is 5 mL, conic shape and the other 11 mL) and one **column oven** for a solid support reaction zone, allowing multiple step (homogenous and heterogeneous) synthesis reactions

- ✓ **16 reagent vials**
  - Eight small (1 – 3 mL) and eight large (10 – 15 mL) volume glass vials for reagents
- ✓ **Eight cartridge holders** for in-process purification
- ✓ **SPE unit** for final product formulation

Additional Synthesis Options

➔ **Product solvent evaporator** (Catalog No. 000pse)

➔ **Mass flow controller option** (Catalog No. 004mfc)

➔ **Variable wavelength UV detector option** (Catalog No. 000vuv)

GMP Features

- ✓ Synthesis files for various tracers available
- ✓ **GMP compliant.** Electronic control and data collection (27/18 channels)
- ✓ **21CFRpart11 & LIMS** compatible

Terminal Control

- ✓ A laptop (Win 10 Pro) and SynthraView are included
- ✓ Four digital inputs for communication with external devices upon request

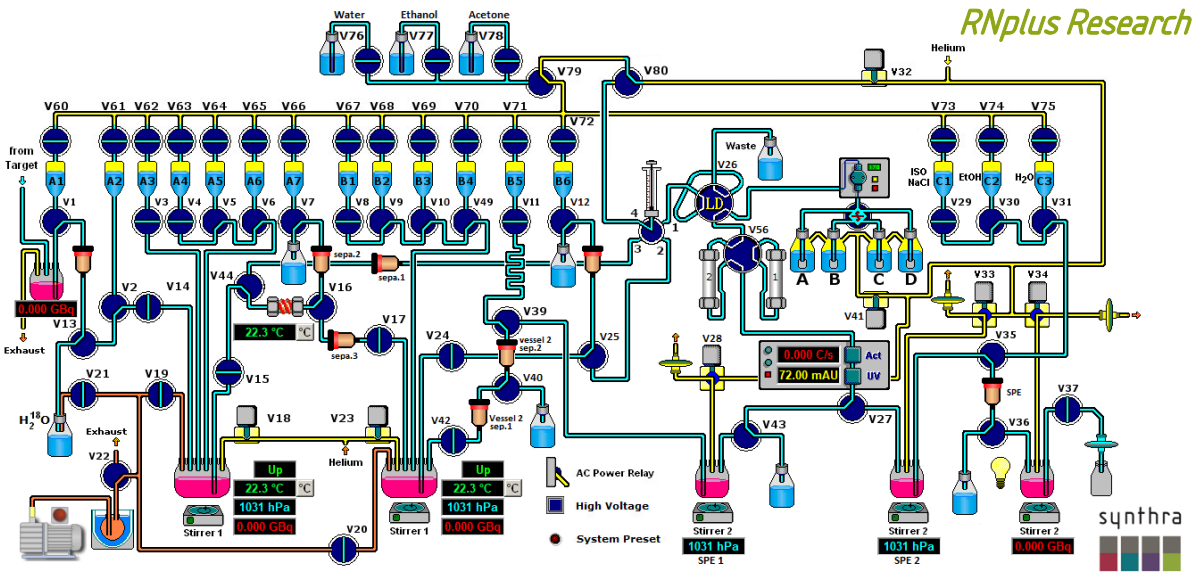

The Graphical User Interface (GUI) of the SynthraView software.

7.2.3 Synthra FDGtwo (Catalog No. 001)

Synthra FDGtwo is a flexible and completely automated radio synthesis system for routine production of **[^{18}F]FDG** as well as [^{18}F]fluorine-labeled compounds like **[^{18}F]FMISO, [^{18}F]FLT** or **[^{18}F]FCh** by nucleophilic substitution. The convenient usable Synthra FDG Set IV and Synthra FDG Set V cartridges have been utilized more than 500,000 times worldwide in more than 20 years. Automating the synthesis is simple with the easy-to-use SynthraView software. The Synthra FDGtwo module offers both, fully automatic and manual modes of operation.

[^{18}F]Labeling Possibilities

- ✓ Synthesis of [^{18}F]FDG:
  - Two independent sets on a single synthesis unit enables two [^{18}F]FDG productions with one setup.
  - Allows up to four FDG synthesis a day
- ✓ The radio synthesis unit has a dedicated sub system for the recovery and collection of [^{18}O]H_2O for the purification of the cyclotron produced [^{18}F]fluoride.
- ✓ The target activity is measured with a separate detector.

General Features

- ✓ **Heating and cooling capabilities**
  - Two heating zones with cooling capabilities
  - Temperature range: RT – 200 °C
- ✓ **Detectors and controllers**
  - Six shielded radiation detectors
  - Two Pressure sensors
- ✓ **Build-in vacuum pump** (<5 mbar)
- ✓ **Liquid nitrogen trap** for protecting the vacuum pump from radioactive volatiles
- ✓ **Dispensers and valves**
  - HR-dispenser (up to 50.000 steps, 5 mL) for operating of the self-cleaning system
- ✓ Chemically inert valves with small dead volume < 35 µL, 5 bar rated

- ✓ **Self-cleaning system**
- ✓ **Size** (w × d × h): 42 × 50 × 48 cm
- ✓ **Weight:** approx. 25 kg

Synthesis Features

- ✓ Two **glassy carbon reaction vessels** (11 mL)
- ✓ Two independent [^{18}F]fluoride separation cartridge
- ✓ Two independent [^{18}F]FDG purification cartridge
- ✓ **Twelve reagent vials**
  - Eight small (1 – 3 mL) and four large (10 – 15 mL) volume glass vials for reagents

Additional Synthesis Options

➔ **Product solvent evaporator** (Catalog No. 000pse)

GMP Features

- ✓ Synthesis files for [18F]FDG
- ✓ **GMP compliant.** Electronic control and data collection (27/18 channels)
- ✓ **21CFRpart11 & LIMS** compatible

Terminal Control

- ✓ A laptop (Win 10 Pro) and SynthraView are included
- ✓ Four digital inputs for communication with external devices upon request

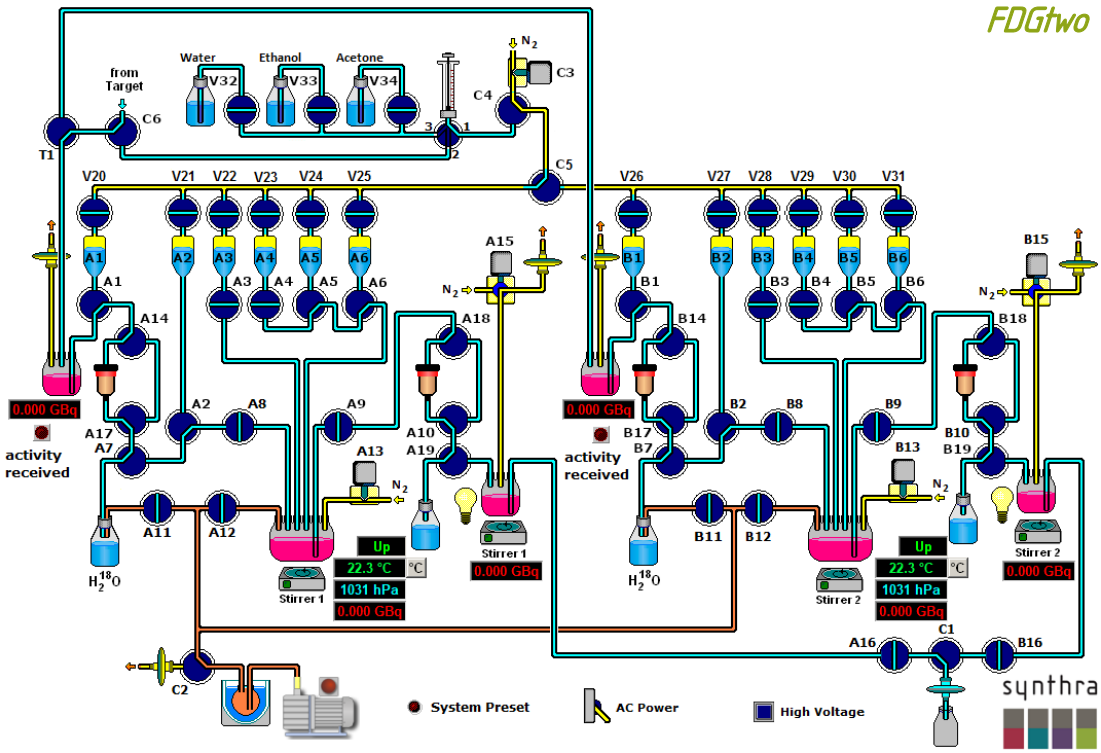

The Graphical User Interface (GUI) of the SynthraView software.

7.2.4 Synthra Electrophilic (Catalog No. 002)

Synthra Electrophilic is a flexible and completely automated radio synthesis system for routine production of a variety of Fluorine-18 labeled compounds for example [^{18}F]FBPA by electrophilic fluorination. Automating the synthesis is simple with the easy-to-use SynthraView software. The Synthra Electrophilic module offers both, fully automatic and manual modes of operation.

[^{18}F]Labeling Possibilities

- ✓ Simple creation of user-defined synthesis methods
- ✓ The target activity is measured with a separate detector.

General Features

- ✓ **Heating and cooling capabilities**
  - One heating zone with cooling capabilities
  - Temperature range: -50 °C – 200 °C
- ✓ **Detectors and controllers**
  - Three shielded radiation detectors
- ✓ **Build-in vacuum pump** (<5 mbar)
- ✓ **Liquid nitrogen trap** for protecting the vacuum pump from radioactive volatiles
- ✓ **Soda-lime trap** for trapping any fluorine before leaving the exhaust
- ✓ Built-in **Radio-HPLC** with isocratic gradient pump, variable wavelength UV/Vis detector and a HPLC column
- ✓ **Self-cleaning system**
- ✓ **Dispensers and valves**
  - One HR-dispenser (up to 50.000 steps, 2.5/5 mL) for liquid transfer
- ✓ Chemically inert valves with small dead volume < 35 µL, 5 bar rated
- ✓ **Size (w × d × h):** 46 × 50 × 48 cm
- ✓ **Weight**: approx. 30 kg

Synthesis Features

- ✓ One glass reaction vessel (-50 °C – 200 °C) with integrated cooling to reduce synthesis time
- ✓ **Four reagent vials**
  - Three small (1 – 3 mL) and one large (10 – 15 mL) volume glass vials for reagents

Additional Synthesis Options

➔ Product solvent evaporator (Catalog No. 000pse)

GMP Features

- ✓ Synthesis files for several tracers available
- ✓ **GMP compliant**. Electronic control and data collection (27/18 channels)
- ✓ **21CFRpart11 & LIMS** compatible

Terminal Control

- ✓ A laptop (Win 10 Pro) and SynthraView are included
- ✓ Four digital inputs for communication with external devices upon request

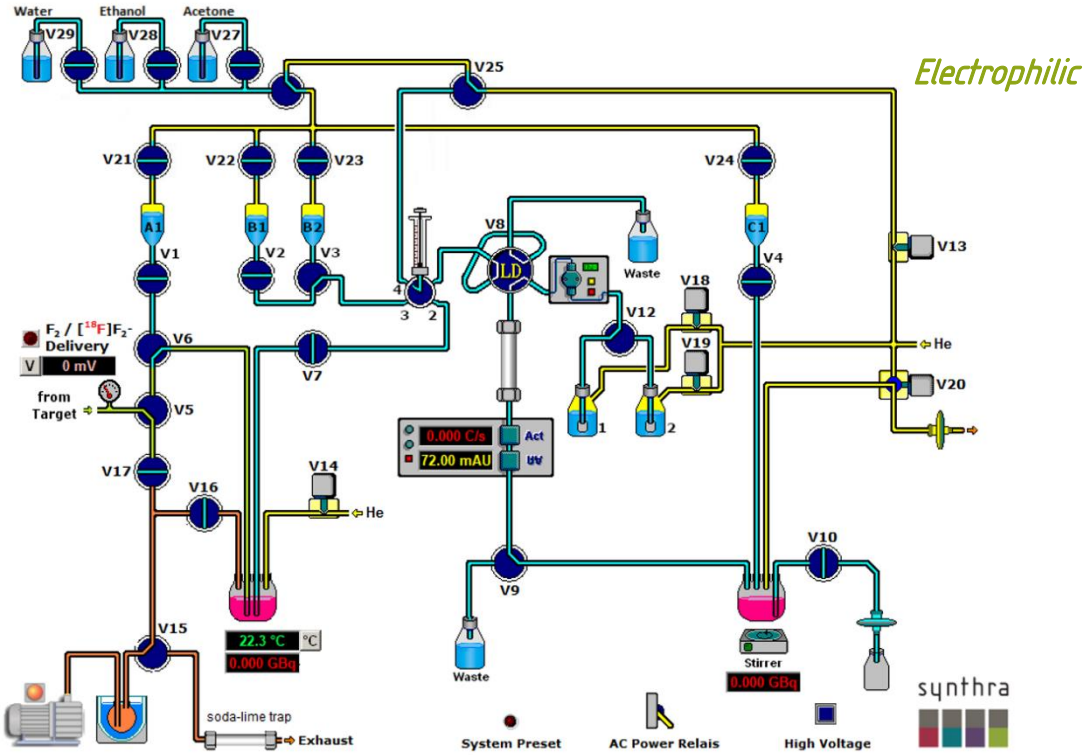

The Graphical User Interface (GUI) of the SynthraView software.

7.3 Additional [^{18}F] options

7.3.1 Mass flow controller option (Catalog No. 004mfc)

An additional mass flow controller can be very useful when a synthesis requires distillation steps. A defined gas flow can be set to optimize the synthesis or increase the reproducibility of the distillation. The mass flow controller operates between 0 and 1000 mL/min to provide the perfect range for any distillation.

7.3.2 Product solvent evaporator (Catalog No. 000pse)

The product heater option offers the opportunity to evaporate solvent from the product solution. Using the heater achieves a higher concentrated product that is essential, for example for *in vivo* small animal studies. Another application is the optimization of the SPE elution step. Excess ethanol can easily be removed from the eluted product. This makes it possible to work with a larger volume of ethanol giving higher yields. The product heating step can be integrated straightforward in any synthesis process.

7.3.3 Alternative wavelength UV detector option

In case it should be necessary to work with other wavelength than Synthra's standard UV-LED with 255 nm, it is possible to find a customized solution for your purpose.

On one hand, it is possible to install other LED components to the factory-set UV/Vis detector. Available wavelengths are 255, 280, 300, 310, 400, 410, 415, 500, 545, 630, 730 nm. Other fixed wavelength cassettes are available on request. These LED cassettes are easy to change, no special tools are required.

On the other hand, Synthra offers a fully automatic variable wavelength UV/Vis detector with a range from 190 nm to 900 nm. This detector can easily be controlled via the SynthraView Software and any wavelength can be set (Catalog No. 000vuv).

8 Other Synthezisers

8.1 Radiometal Chemistry

Besides the fields of ^{18}[F] and ^{11}[C], there's also the topic of using radioactive metals in PET tracer synthesis. The most commonly used isotopes are [^{68}Ga], [^{64}Cu] and [^{89}Zr], but [^{128}Y] and [^{177}Lu] can be found as well. Many of those radiometals share similar chemical characteristics in a way that already known synthesis techniques can be applied to expand the range of radiometal tracers. The labeling of peptides is realized by chelation, which is a fast and easy mechanism for the production of said tracers. In a nutshell, the chelating agent is linked to a peptide designed for its biological target in the patient (key-lock principle). A popular example for a chelating agent is the DOTA ligand in the DOTATOC peptide which forms a coordination complex with a radiometal ion like [^{68}Ga]^{III}. Depending on the radiometal that is bound in this complex, a specific disease can either be located or even treated.

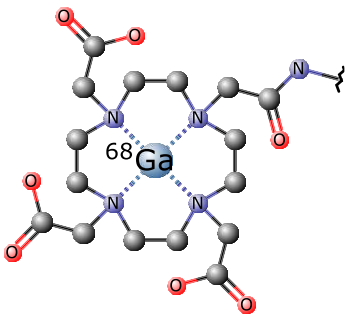

[^{68}Ga]DOTA Complex

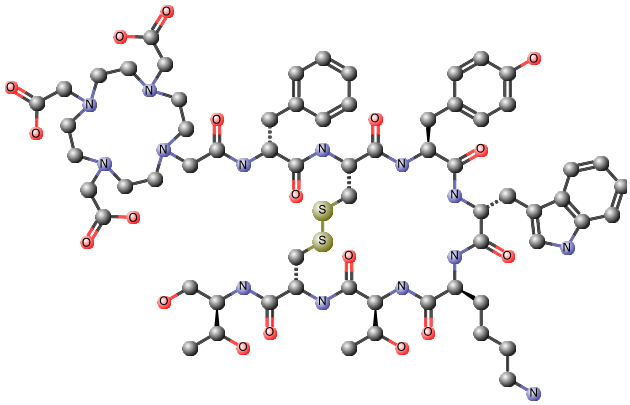

DOTATOC

An advantage those radiometals possess is that some radiometals like [^{68}Ga] don't necessarily need a cyclotron to be produced. They can be obtained by using a radiometal generator where the long-living parent isotope is converted by electron capture to the desired short-living metal isotope. Generators provide a cheap source for radiometals used for research and clinical imaging/therapy. Popular isotopes produced by generators are [^{62}Cu], [^{68}Ga], [^{82}Rb].

Synthra modules for radiometal chemistry are reduced to important parts to ensure a safe and easy synthesis for the radiometal labeled tracers. Synthra's standard modules provide all features needed for the most common syntheses and can be expanded according to customer needs.
At the beginning of the synthesis either the generator will be eluted by the built-in syringe or the target solution will be delivered to the module. It is within the customer's discretion whether an additional purification step with a SCX cartridge is necessary. The radiometal is transferred into the reaction vessel, there a buffer and the peptide are added. For purification, the reaction mixture can either be passed over a C_{18} cartridge or purified by HPLC and SPE. After the purification steps the final product is eluted into the product vial.

An overview of tracers that can be synthesized with the Synthra MChelate modules is listed below:

[^{68}Ga]Radiotracer	**Target**	**Application**
[^{68}Ga]DOTATOC	Somatostatin receptor	Neuroendocrine tumors
[^{68}Ga]DOTATATE	Somatostatin receptor	Neuroendocrine tumors
[^{68}Ga]PSMA	Prostate cancer cells	Prostate cancer imaging
[^{177}LU]PSMA	Prostate cancer cells	Prostate cancer therapy
[^{82}Rb]RbCl	Heart muscle cells	Myocardial perfusion imaging
[^{64}Cu]DOTATATE	Somatostatin receptor	Neuroendocrine tumors
[^{62}Cu]ATSM	Hypoxic tissue	Hypoxic imaging

8.2 Synthra Radiometal Synthesizer

8.2.1 Synthra MChelate (Catalog No. 013)

Synthra MChelate is a completely automated synthesis system for routine production of [^{68}Ga], [^{90}Y], [^{177}Lu] and [^{89}Zr] labeled peptides. With the easy-to-use SynthraView software it's simple to automate the synthesis. The Synthra MChelate module offers both, fully automatic and manual modes of operation.

Labeling Possibilities

- ✓ **Peptide application: DOTATOC** or **DOTATATE** can be labeled by heating 50 nmol of peptide at pH 3.5 - 4.2 for 5 min at 95 °C. For purification, the reaction mixture is passed over a C-18 cartridge to avoid any potential metal breakthrough.
  - **[^{68}Ga] Labeling:** The automated synthesis takes about 20 minutes with a decay-corrected yield of about 50%.
  - **[^{177}Lu] Labelling:** The automated synthesis takes about 15 minutes with a decay-corrected yield of >70%.
- ✓ **[^{89}Zr] solution application:** Monoclonal antibodies (mAbs) conjugated with DFO can be labeled fully automated at room temperature in 60 min. The reaction mixture can be purified and desalted using a PD-10 SEC column.

General Features

- ✓ **Heating and cooling capabilities**
  - One heating zone with cooling capabilities
  - Temperature range: RT – 200 °C
- ✓ **Detectors and controllers**
  - Two shielded radiation detectors
  - One pressure sensor
- ✓ **Build-in vacuum pump** (< 250 mbar)

- ✓ **Dispensers and valves**
  - HR-dispenser (up to 50.000 steps, 2.5/5 mL)
  - Chemically inert valves with small dead volume < 35 µL, 5 bar rated
- ✓ **Size** (w × d × h): 24 × 30 × 35 cm
- ✓ **Weight:** approx. 15 kg

Synthesis Features

- ✓ **Six reagent vials**
  - Four small (1 – 3 mL) and two large (10 – 15 mL) volume glass vials for reagents
- ✓ Two cartridge holders
- ✓ **SPE unit** for final product formulation

Additional Synthesis Options

➔ **Product solvent evaporator** (Catalog No. 000pse)

➔ **[^{18}F] option** (Catalog No. 013f) with [^{18}O]water recovery system

GMP Features

- ✓ Synthesis files for various radiotracers available
- ✓ **GMP compliant**. Electronic control and data collection (27/18 channels)
- ✓ **21CFRpart11** & **LIMS** compatible

Terminal Control

- ✓ A laptop (Win 10 Pro) and SynthraView are included
- ✓ Four digital inputs for communication with external devices upon request

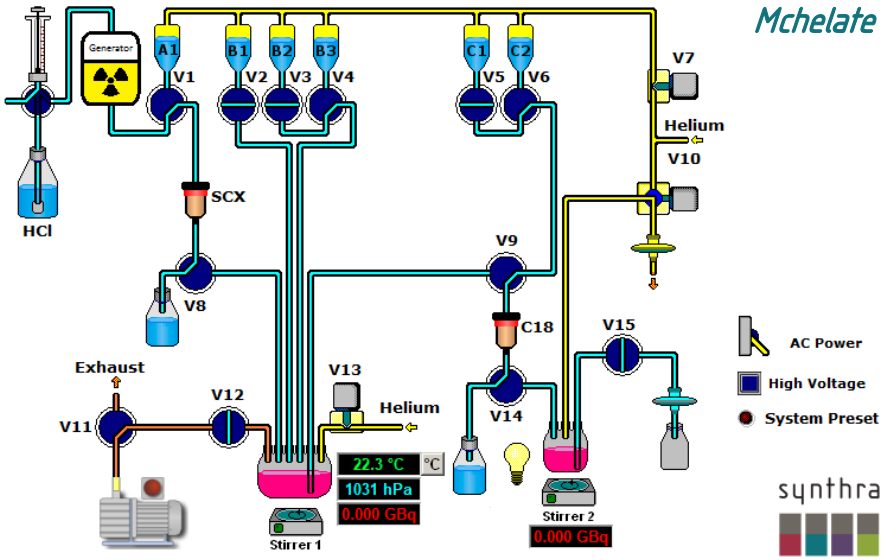

The Graphical User Interface (GUI) of the SynthraView software.

8.2.2 Synthra MChelateplus (Catalog No. 013p)

Synthra MChelateplus is a flexible and completely automated radio synthesis system for routine production of a wide variety of Metal- ([^{64}Cu], [^{89}Zr], [^{44}Sc], [^{68}Ga], [^{86}Y], [^{177}Lu]) labeled compounds for example M-PSMA-, M-DOTA-, M-NOTA-, M-TE2A-, M-TETA-, M-ATSM-, M-PTSM-based radiotracers. Automating the synthesis is simple, with the easy-to-use SynthraView software. The Syntha MChelateplus module offers both, fully automatic and manual modes of operation.

Labeling Possibility Examples

- ✓ **Peptide application: DOTATOC** or **DOTATATE** can be labeled by heating 50 nmol of peptide at pH 3.5 – 4.2 for 5 min at 95 °C. For purification, the reaction mixture is passed over a C-18 cartridge to avoid any potential metal breakthrough.
  - **[^{68}Ga] Labeling:** The automated synthesis takes about 20 minutes with a decay-corrected yield of about 50 %.
  - **[^{177}Lu] Labelling:** The automated synthesis takes about 15 minutes with a decay-corrected yield of >70 %.
- ✓ **[^{89}Zr] solution application**: Monoclonal antibodies (mAbs) conjugated with DFO can be labeled fully automated at room temperature in 60 min. The reaction mixture can be purified and desalted using a PD-10 SEC column. The automated synthesis takes about 80 minutes with isolated yield of >70 %.

General Features

- ✓ **Heating and cooling capabilities**
  - One heating zone with cooling capabilities
  - Temperature range: -50 °C - 200 °C
- ✓ **Detectors and controllers**
  - Four shielded radiation detectors
  - Two pressure sensors

- ✓ **Liquid nitrogen trap** for radioactive volatiles and to protect built-in vacuum pump
- ✓ **Built-in preparative radio/UV-HPLC system**, fixed wavelength LED detector with 255 nm or 280 nm, HPLC column and solid phase extraction (SPE)
- ✓ **Self-cleaning system**
- ✓ **Build-in vacuum pump**(< 250 mbar)
- ✓ **Dispensers and valves**
  - HR-dispenser (up to 50.000 steps, 2.5/5 mL)
  - HPLC pneumatic injection valve (3 mL sample loop)
  - Three spare valves for customization
  - Chemically inert valves with small dead volume < 35 µL, 5 bar rated
- ✓ **Size** (w × d × h): 52 × 50 × 48 cm
- ✓ **Weight**: approx. 35 kg

Synthesis Features

- ✓ **Eight reagent vials**
  - Six small (1 – 3 mL) and two large (10 –15 mL) volume glass vials for reagents
- ✓ **Three cartridge holders** for in-process purification
- ✓ **SPE unit** for final product formulation

Additional Synthesis Options

- ➔ **Product solvent evaporator** (Catalog No. 000pse)
- ➔ **[^{18}F] option** (Catalog No. 013f) with [^{18}O]water recovery system
- ➔ **Variable wavelength UV detector option** (Catalog No. 000vuv)

GMP Features

- ✓ Synthesis files for various tracers
- ✓ **GMP compliant.** Electronic control and data collection (27/18 channels)
- ✓ **21CFRpart11 & LIMS** compatible

Terminal Control

- ✓ A laptop (Win 10 Pro) and SynthraView are included
- ✓ Four digital inputs for communication with external devices upon request

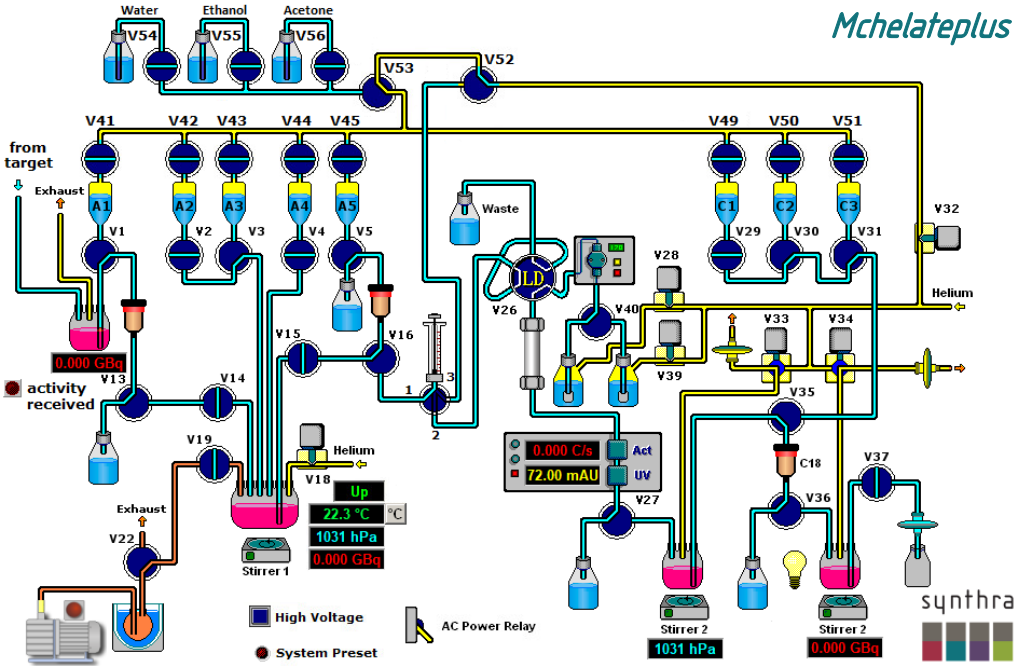

The Graphical User Interface (GUI) of the SynthraView software.

8.3 Ammonia Chemistry

[^{13}N]ammonia is a well-established radiotracer for cardiac positron emission tomography. Due to the less invasive evaluation and a high temporal resolution that allows *in vivo* measurements, the main clinical application of [^{13}N]ammonia is the evaluation of the myocardial blood flow. [^{13}N]NH_3 is formed by the bombardment of [^{16}O]H_2O in the target of the cyclotron. The target solution is purified by and reformulated via an ion exchange cartridge. By injecting this solution to the patient, [^{13}N]ammonia passes through the ammonia transporter into the cells, where it is converted to glutamine.

8.4 Ammonia Synthesizer

8.4.1 Synthra N13/NaF (Catalog No. 010)

The Synthra N13/NaF is a completely automated and very compact radio synthesis system for routine production of [^{13}N]NH_3 or [^{18}F]NaF. The SynthraView software offers both, fully automatic as well as manual modes of operation of the Synthra Ammonia module.

Labeling Possibilities

- ✓ Synthesis of **[^{13}N]ammonia**
- ✓ Synthesis of **[^{18}F]NaF**
- ✓ The radio synthesis system has a dedicated sub system for the **recovery and collection of [^{18}O]H_2O** for the purification of the cyclotron produced [^{18}F]fluoride.
- ✓ The target activity is measured with a separate detector.

General Features

- ✓ Three shielded radiation detectors
- ✓ **Build-in vacuum pump**(< 250 mbar)
- ✓ Chemically inert valves with small dead volume < 35 µL, 5 bar rated
- ✓ **Size** (w × d × h): 24 × 30 × 35 cm
- ✓ **Weight**: approx. 15 kg
- ✓

Synthesis Features

- ✓ **Three reagent vials**
  - Two small (1 – 3 mL) and one large (10 –15 mL) volume glass vials for reagents
- ✓ Two cartridge holders

Synthesis option:

➔ **Product solvent evaporator** (Catalog No. 000pse)

GMP Features

- ✓ Synthesis files for [^{13}N]NH_3 and [^{18}F]NaF
- ✓ **GMP compliant**. Electronic control and data collection (27/18 channels)
- ✓ **21CFRpart11 & LIMS** compatible

Terminal Control

- ✓ A laptop (Win 10 Pro) and SynthraView are included
- ✓ Four digital inputs for communication with external devices upon request

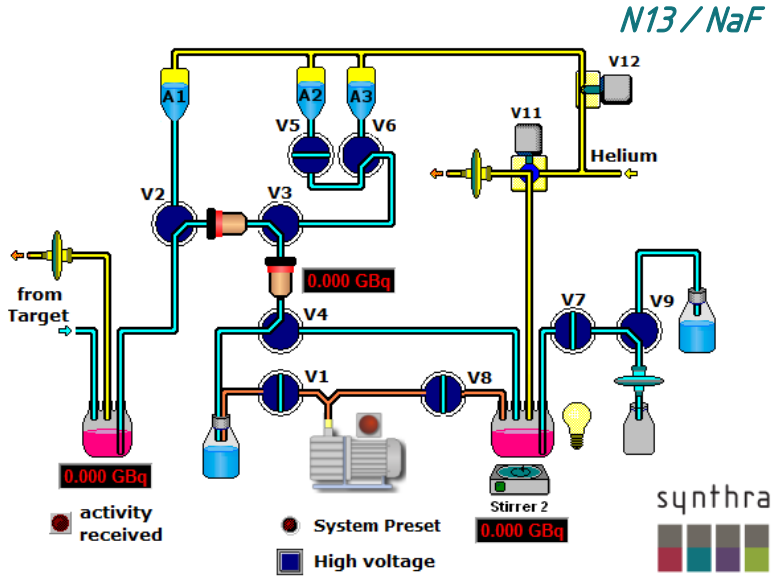

The Graphical User Interface (GUI) of the SynthraView software.

9 Customized Solutions

Every standard module can be modified, downgraded or upgraded depending on the user's requirements. Moreover, Synthra builds complete modules for special demands. If you have any questions referring to modifications of a module, you are always welcome to contact the Synthra team with your ideas.

General Customization Options for your System

- ✓ HPLC upgrade options are
  - Quaternary gradient pump
  - Additional HPLC semi-prep column
  - Column switching/selection valve
- ✓ Additional features are
  - Additional reagent vials
  - Additional reactor/loop oven
  - Additional cartridge holder/column oven
  - Additional SPE
  - Additional radioactivity detector

Upon consultation, Synthra customizes every module according to the customer's requests. If you have any specific ideas to modify your module, we would be happy to share your visions and make it come true.

Some examples Synthra implemented in the past

On customer's request Synthra installed three reaction vessels in a RNplus Research for enabling special [^{18}F]fluorine tracer production. Instead of the standard column oven, a third reaction vessel is added to the module.

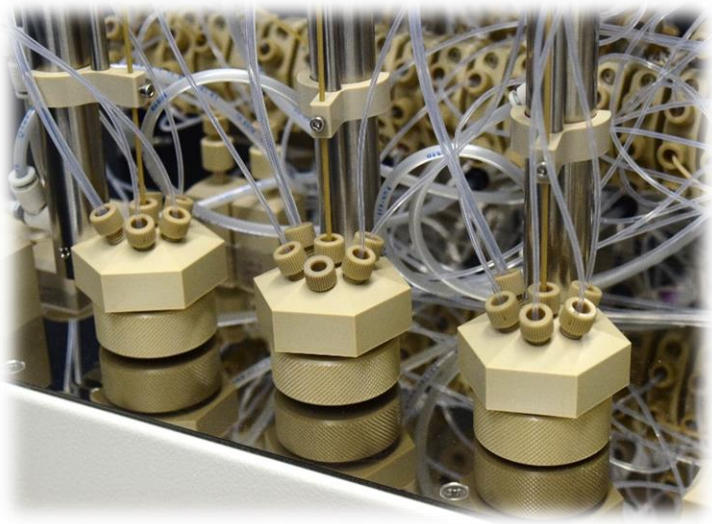

Due to a lack of hot cells this [^{11}C]carbon chemistry module has an additional [^{18}F]fluoride separation part to be flexible on production with either nuclide. This way only one hot cell was needed for the research with both nuclides.

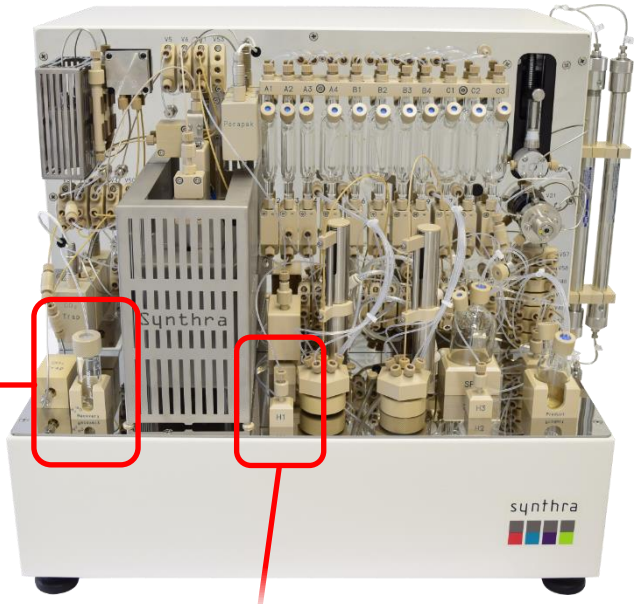

[^{18}O]H_2O recovery vial

[^{18}F]F separation cartridge holder

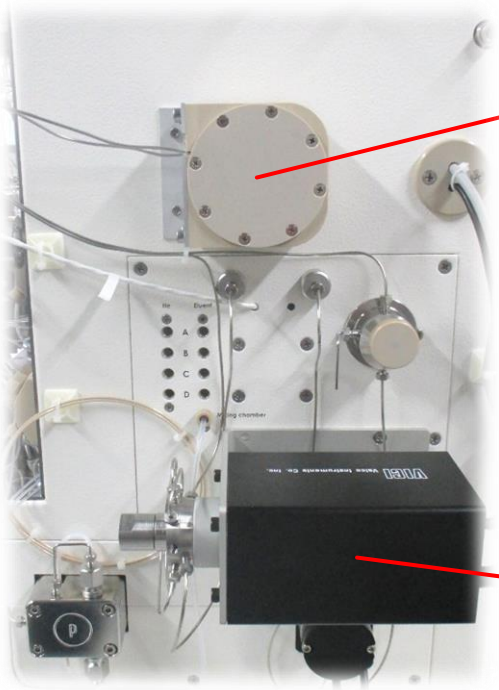

Loop oven

This picture shows a module with an optional loop oven and a column selection valve to use four different HPLC columns. Equipped with four columns the module can produce various tracers without replacing a HPLC column.

Column selection valve

All mentioned modifications are also implemented in the SynthraView software.

10 HPLC Equipment

10.1 Synthra HPLC Units

Synthra offers different stand-alone HPLC units for different purpose. These modules are available for purification and reformulation or for quality control applications.

10.1.1 Synthra Radpureplus (Catalog No. 020)

Synthra Radpureplus is a compact radio-UV/Vis-HPLC system with SPE for routine purification and reformulation of any radiotracer. With the easy-to-use SynthraView software, the Synthra Radpureplus module offers both, fully automatic and manual modes of operation.

General Features

- ✓ Three shielded radiation detectors
- ✓ **Dispensers and valves**
  - HR-dispenser (up to 50.000 steps, 5 mL)
  - HPLC pneumatic injection valve (3 mL sample loop)
  - Chemically inert valves with small dead volume < 35 µL, 5 bar rated
- ✓ **Preparative radio/UV-HPLC system** with quaternary gradient pump, variable wavelength UV/VIS detector with 190 nm to 900 nm
- ✓ **Online vacuum degasser**
- ✓ **One SPE unit**
  - SPE vial (55 or 130 mL)
  - Three reagent vials. One small (1 – 3 mL) and two large (10 – 15 mL) volume glass vials for reagents
  - One purification cartridge holder
- ✓ Chromatographic separation possible, e.g. via C-18, NH_2, or GPC columns
- ✓ **Size** (w × d × h): 44 × 50 × 48 cm
- ✓ **Weight**: approx. 25 kg

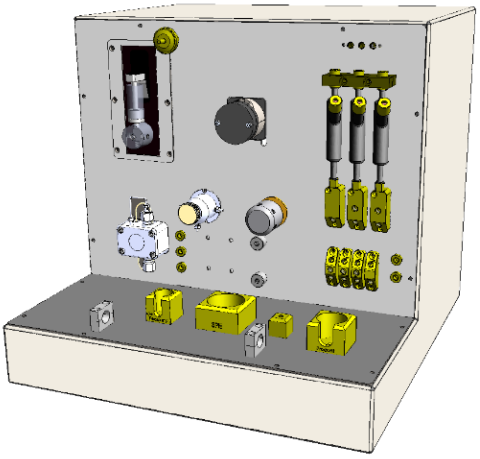

Additional Options

➔ **Product solvent evaporator** (Catalog No. 000pse)

GMP Features

- ✓ Operation file available
- ✓ **GMP compliant**. Electronic control and data collection (27/18 channels)
- ✓ **21CFRpart11 & LIMS** compatible

Terminal Control

- ✓ A laptop (Win 10 Pro) and SynthraView are included
- ✓ Four digital inputs for communication with external devices

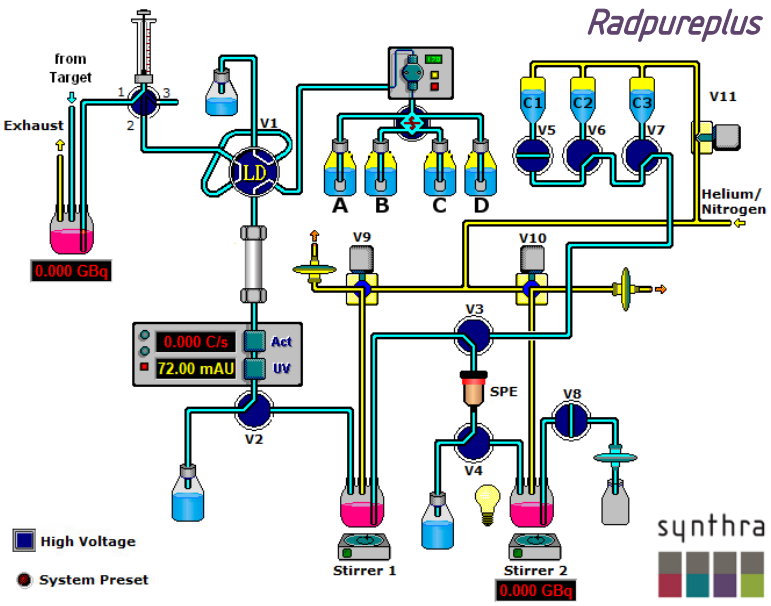

The Graphical User Interface (GUI) of the SynthraView software.

10.1.2 Synthra Radchomplus (Catalog No. 021)

Synthra RadChromplus is a compact radio-UV/Vis-HPLC system for routine quality control of any radiotracer. The user-friendly software Chromstar 7 allows the measurement of the chemical and radiochemical purity. Available are two basic modules: one with an isocratic pump and a second module with a quaternary gradient pump. Both modules can be upgraded individually.

General Features

- ✓ **Variable wavelength detector**
  - Baseline noise: ± 1 × 10-5 AU (240 nm, 1 s rise-time)
  - Baseline drift: 2 × 10-4 AU/h
  - Wavelength range: 190 - 900 nm, accuracy: ± 2 nm
  - Light source: Deuterium and tungsten lamp
- ✓ **Radioactivity detector**
  - Diode detector
    - β particle detector, no shielding required
  - NaI(Tl) detector
    - γ detector, 2” NaI(Tl) well detector with 5.5 cm lead shielding
- ✓ **Online vacuum degasser**
- ✓ **Manual injection valve**

GMP Features

- ✓ **GMP compliant.** Electronic control and data collection (27/18 channels)
- ✓ **21CFRpart11** & **LIMS** compatible

Terminal Control

- ✓ A laptop (Win 10 Pro) and Chromstar 7 are included
- ✓ Password protected access to software

- ✓ **Size** (w × d × h): 42 × 55 × 23 cm
- ✓ **Weight**: approx. 20 kg

Additional Options

- ➔ UV-detector upgrades: 2 channels or DAD
- ➔ All wetted stainless steel parts inclusive pump head are available in PEEK
- ➔ Column selection valve for up to four columns for measuring various tracer/nuclides with a single setup
- ➔ Refraction index (RI) detector

Catalog No. 021i

✓ **Isocratic pump**

- Micro: Flow rate 0.001 – 2 mL/min (0 – 400 bar)
- Analyt.: Flow rate 0.001 – 10 mL/min (0 – 400 bar)
- Pressure pulsation: typical < 1 bar or < 1 %
- One eluent solvent supply bottle

Catalog No. 021q

✓ **Quarternary gradient pump**

- Micro: Flow rate 0.001 – 2 mL/min (0 – 400 bar)
- Analyt.: Flow rate 0.001 – 10 mL/min (0 – 400 bar)
- Pressure pulsation: typical < 1 bar or < 1%
- Gradient Range: 0.0 - 100.0 %, 4 channels
- Gradient Accuracy: < 0.25 %
- Active gradient mixing chamber
- Mixing volume: adjustable: 10 – 500 µL
- Four eluent solvent supply bottles

Impressum information:

Synthra GmbH
Albert-Einstein-Ring 21
22761 Hamburg
Germany

Fon: +49 (0)40 88 167 437-0
Fax: +49 (0)40 88 167 437-28

Mail: accounts@synthra.com
Web: www.synthra.com

Dr. Bruno Nebeling
CEO

Amtsgericht Hamburg
Handelsregister HRB 105205

VAT: DE814984964
EORI: DE7117655

The pictures and text used in this catalog are copyrighted. Without the agreement of Synthra GmbH the replication, editing and distribution is not allowed. The content of the catalog has been carefully prepared. Nevertheless, errors and incompleteness cannot always be avoided. A legal and binding assurance of certain properties cannot be derived from this information. Synthra GmbH reserves the right to modify the information contained herein without prior notice.

synthra

Synthra GmbH
Albert-Einstein-Ring 21
22761 Hamburg
Germany
Fon +49 40 88 167 437-0
Fax +49 40 88 167 437-28
info@synthra.com
www.synthra.com